TAM CEM Residence Addition & Alteration

CONSTRUCTION AND REMODELING

SYMBOL LEGEND:

GRIDLINE

FACE OF SHEATHING / STUD (FOS)

VERTICAL DATUM

DIMENSION

FACE OF STUD

FACE OF FINISH

WALL THICKNESS DESIGNATION

USED FOR NON-TYPICAL CONDITIONS, REFER TO WALL ASSEMBLY FOR CLARIFICATION

CONSTRUCTION KEYNOTE

DEMOLITION KEYNOTE

SMOKE DETECTOR

(IBC-SECTION 907.2.10)
NOTE: ALL SMOKE DETECTORS TO BE "PHOTOELECTRIC SMOKE ALARM" TYPE PER SECTION IBC/IFC 907.2.10.3

CARBON MONOXIDE DETECTOR

(IBC – SECTION 915)

EXHAUST FAN

MIN. 50 CFM FOR BATHROOM AND LAUNDRY; MIN. 100 CFM FOR KITCHEN, WITH DIRECT VENT TO EXTERIOR

DOOR SYMBOL

WINDOW SYMBOL

SECTION REFERENCE

NUMBER IDENTIFICATION

SHEET NUMBER

DETAIL REFERENCE

NUMBER IDENTIFICATION

SHEET NUMBER

ELEVATION REFERENCE

NUMBER IDENTIFICATION

SHEET NUMBER

DRAWING NUMBER & TITLE

DETAIL TITILE

DETAIL NUMBER

NORTH ARROW

REVISION TAG & CLOUD

ABBREVIATIONS:

ABV	ABOVE	FOS	FACE OF STUD	REBAR	REINFORCEMENT BAR
AFF	ABOVE FINISH FLOOR	FRMG	FRAMING	REFR	REFRIGERATOR
BLDG	BUILDING	FRZR	FREEZER	REQD	REQUIRED
BLKG	BLOCKING	FT	FOOT	REQTS	REQUIREMENTS
BM	BEAM	FTG	FOOTING	RAFT	RAFTER
BOT	BOTTOM	FV	FIELD VERIFY	RO	ROUGH OPENING
CIPC	CAST-IN-PLACE CONCRETE	FV	FOUNDATION VENT	R.O.W.	RIGHT-OF-WAY
℄	CENTERLINE	GA	GAUGE	RFT	RIP-TO-FIT
CLG	CEILING	GB	GYPSUM BOARD	RTS	RIP-TO-SLOPE
CLR	CLEAR	GLB	GLULAM BEAM	RV	RIM VENT
CMD	CARBON MONOXIDE DETECTOR	GSM	GALVANIZED SHEET METAL	SC	SOLID CORNER
CO	CLEANOUT	HDR	HEADER	SD	SMOKE DETECTOR
CONC	CONCRETE	HGR	HANGER	SF	SQUARE FEET
CONT	CONTINUOUS	h	HIGH	SG	SAFETY GLAZING
D	DRYER	HT	HEIGHT	SHWR	SHOWER
DBLE	DOUBLE	HVAC	HEATING, VENTILATION, &	SIM	SIMILAR
DEMO	DEMOLISH		AIR-CONDITIONING	SPEC	SPECIFICATIONS
DIA	DIAMETER	IG	INSULATED GLASS	SQ FT	SQUARE FEET
DN	DOWN	INT	INTERIOR	SQ IN	SQUARE INCHES
DP	DEEP	LAV	LAVATORY	STD	STANDARD
DP	DIMENSION POINT	LBS	POUNDS	SUBFLR	SUBFLOOR
DS	DOWNSPOUT	LF	LINEAR FEET	T&G	TONGUE & GROOVE
DTL	DETAIL	LO	LOW	THK	THICK
DW	DISHWASHER	MAX	MAXIMUM	TOPO	TOPOGRAPHY
(E)	EXISTING	MFR	MANUFACTURER	TOW	TOP OF WALL
EA	EACH	MIN	MINIMUM	TYP	TYPICAL
ELEV	ELEVATION	(N)	NEW	UNO	UNLESS NOTED OTHERWISE
EQ	EQUAL	N/A	NOT APPLICABLE	VTO	VENT TO OUTSIDE
EXT	EXTERIOR	NIC	NOT IN CONTRACT	w	WIDE
EW	EACH WAY	O/	OVER	W	WASHER
*EW	EGRESS WINDOW	OC	ON CENTER	W/	WITH
FDN	FOUNDATION	OG	OBSCURE GLAZING	WC	WATER CLOSET
FG	FINISH GRADE	OH	OVERHANG	WFC	WOOD FRAME CONSTRUCTION
FIN	FINISH	P.L.	PROPERTY LINE	WH	WATER HEATER
FL	FLUSH	PL	PLATE	WIC	WALK-IN-CLOSET
FLR	FLOOR	PT	POINT	WP	WORK POINT
FOF	FACE OF FINISH	PTW	PRESERVATIVE TREATED WOOD	WWF	WELDED WIRE FABRIC

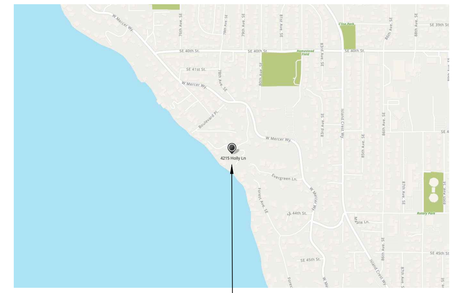

VICINITY PLAN:

SCALE: NOT TO SCALE

N

SITE LOT AREA

LOT AREA: (0.58 ACRES) 25,059 S.F.

PROJECT SQUARE FOOTAGES:

EXISTING RESIDENCE	
(E) FINISHED BASEMENT AREA:	1,160 SF
(E) 1ST FLOOR AREA:	1,740 SF
(E) DECK AREA:	310 SF
(E) OPEN PORCH AREA:	70 SF
(E) DETACHED GARAGE AREA:	1,190 SF
(E) EXCERCISE ROOM AREA:	600 SF
(E) BONUS ROOM ABOVE GARAGE AREA (TO BE CONVERTED TO LIVING):	600 SF
EXISTING TOTAL LIVING AREA:	2,900 SF

PROPOSED RESIDENCE	
(E) FINISHED BASEMENT AREA:	1,160 SF
(E) 1ST FLOOR AREA:	1,740 SF
(E) DECK AREA:	310 SF
(E) OPEN PORCH AREA:	70 SF
(E) DETACHED GARAGE AREA:	1,190 SF
(E) EXCERCISE ROOM AREA:	600 SF
PROPOSED BASEMENT ADDITION AREA:	455 SF
PROPOSED 1ST FLOOR ADDITION AREA:	713 SF
2ND FLOOR PLAN ADDITION AREA (INCL. (E) BONUS ROOM ABOVE GARAGE):	1,256 SF
PROPOSED COVERED PORCH AREA:	209 SF
EXISTING + PROPOSED TOTAL LIVING AREA:	5,324 SF

PROJECT CONTACT INFORMATION:

OWNER:
Sibay Cem & Minh Tam
4215 Holly Ln.
Mercer Island, WA 98040

PROJECT COORDINATOR:
Calvin Tam
10040 Sand Point Way NE
Seattle, WA 98125

PROJECT PROPERTY INFORMATION:

PROJECT ADDRESS:
4215 Holly Ln.
Mercer Island, WA 98040

LEGAL DESCRIPTION:
ROGERS HOLLY LANE ADD LOT 4 TGW POR LOT 1 BEG SW COR SD LOT 4 TH S 35-08-12 E 10 FT TH N 54-51-48 E 88 FT TH N 35-08-12 W 10 FT TO COMMON PROPERTY LN OF LOTS 1 & 4 TH S 54-51-48 W ALG SD COMMON PROPERTY LN 88 FT TO BEG TGW UND INT IN COMMUNITY TR TGW POR OF LOT 3 ELY OF LN BEG AT NE COR SD LOT 3 TH SWLY ALG NLY LN SD LOT 3 DIST 31 FT TO TPOB TH S 09-08 E 41.6 FT TH S 01-50-40 E 36 FT TH S 10-32-34 E 110.50 FT TO S LOT 3 & TERM SD LN
AKA LOT 4 RR MI BLA 86-03-03 REC NO 8604109002
PLat Block:
Plat Lot: 4 &

ASSESSOR'S TAX NUMBER:
738900-0040

LAND USE ZONE:
R-15

PROJECT DESCRIPTION:
BUILDING ADDITION TO AN EXISTING SINGLE FAMILY RESIDENCE AND INTERIOR ALTERATION.

CODE INFORMATION:

APPLICABLE CODES (AS AMENDED BY WA STATE, KING COUNTY & LOCAL JURISDICTION):

2021 INTERNATIONAL RESIDENTIAL CODE (IRC)

2021 NATIONAL ELECTRICAL CODE

2021 UNIFORM PLUMBING CODE (UPC)

MECHANICAL CODE PER 2021 (IRC)

WASHINGTON STATE ENERGY CODE, 2021 EDITION (WSEC)

WASHINGTON STATE VENTILATION AND INDOOR AIR QUALITY CODE, 2021 EDITION (VIAQ)

OCCUPANCY: GROUP R-3 (SINGLE-FAMILY RESIDENTIAL)

SPRINKLER SYSTEM REQUIREMENT:
PROJECT SHALL INSTALL AN APPROVED RESIDENTIAL FIRE SPRINKLER SYSTEM. SEPARATE PLANS AND PERMITS REQUIRED FOR SUBMISSION BY THE INSTALLING CONTRACTOR. (A NFPA 13D FIRE SPRINKLER SYSTEM IN COMPLIANCE WITH NFPA 13D AND CoMI STANDARDS SHALL BE INSTALLED THROUGHOUT THE RESIDENCE. THIS SYSTEM REQUIRES A MINIMUM OF 1"WATER METER AND 1"WATER SUPPLY LINE.)

NOTE: IF APPLICABLE FOR PROJECT SCOPE.

ELECTRICAL PLAN AND SYSTEM TO BE DESIGNED BY INSTALLING CONTRACTOR AND SHALL CONFORM TO ALL APPLICABLE CODES & REGULATIONS.

PLUMBING PLAN AND SYSTEM TO BE DESIGNED BY INSTALLING CONTRACTOR AND SHALL CONFORM TO ALL APPLICABLE CODES & REGULATIONS.

HEATING & MECHANICAL VENTILATION SYSTEM TO BE DESIGNED BY INSTALLING CONTRACTOR AND SHALL CONFORM TO ALL APPLICABLE CODES & REGULATIONS.

ELECTRICAL, PLUMBING & HVAC TO BE UNDER SEPARATE PERMIT SUBMITTAL.

INDEX OF DRAWINGS:

ARCHITECTURAL:

T1.0	GENERAL INFORMATION
T2.0	TESC & SOIL PLAN
T3.0	SITE PLAN
T4.0	SITE CALCULATIONS
T5.0	ENERGY FORM
T6.0	CODES NOTES
A1.1	BASEMENT DEMO PLAN
A1.2	1ST FLOOR DEMO PLAN
A1.3	2ND FLOOR PLAN
A1.4	ROOF DEMO PLAN
A2.0	FOUNDATION PLAN
A2.1	BASEMENT FLOOR PLAN
A2.2	1ST FLOOR PLAN
A2.3	2ND FLOOR PLAN
A2.4	ROOF PLAN
A3.1	EXISTING ELEVATIONS
A3.2	ELEVATIONS
A4.0	SECTIONS
D1.0	SCHEDULES
D2.0	DETAILS
D3.0	DETAILS

STRUCTURAL:

S1.1	GENERAL STRUCTURAL NOTES
S1.2	SHEARWALL SCHEDULE & NOTES
S1.3	HOLD-DOWN SCHEDULES & NOTES
S1.4	SPECIAL INSPECTION TABLES
S2.1	FOUNDATION PLAN
S2.2	MAIN FLOOR FRAMING PLAN
S2.3	SECOND FLOOR FRAMING PLAN
S2.4	ROOF FRAMING PLAN
S6.1	FOUNDATION DETAILS
S9.1	FRAMING DETAILS
S9.2	STEEL FRAMING DETAILS

TAM CEM - RESIDENCE
Addition & Alteration
4215 Holly Ln, Mercer Island, WA 98040

Permit Set

Job # 24-028

Description	Date
Permit Intake	10/07/24
1 Correction 01	02/04/25
2 Correction 02	03/06/25

Permit No.: 2407-213

Drawn:
Stamp/Approval:

Sheet Name:

GENERAL INFORMATION

Sheet No:

T1.0

TESC GENERAL NOTES

1. VERITY WITH LOCAL JURISDICTION IF A FIRST GROUND DISTURBANCE INSPECTION IS REQUIRED PRIOR TO START OF WORK ON ALL SITES WITH LAND DISTURBING ACTIVITY.
2. THE APPLICANT SHALL DESIGNATE AN EROSION AND SEDIMENT CONTROL (ESC) SUPERVISOR WHO SHALL BE RESPONSIBLE FOR THE INSTALLATION AND MAINTENANCE OF EROSION AND SEDIMENT CONTROL BEST MANAGEMENT PRACTICES (BMPS). FOR LARGE CONSTRUCTION PROJECTS, THE ESC SUPERVISOR SHOULD BE A CERTIFIED EROSION AND SEDIMENT CONTROL LEAD (CESCL). PROVIDE THE NAME AND PHONE NUMBER OF THE ESC SUPERVISOR TO THE SITE INSPECTOR AT THE FIRST GROUND DISTURBANCE INSPECTION.
3. BMPS SHALL BE INSTALLED PRIOR TO STARTING CONSTRUCTION TO ENSURE SEDIMENT-LADEN WATER DOES NOT LEAVE THE PROJECT SITE OR ENTER ROADSIDE DITCHES, STORM DRAINS, SURFACE WATERS, OR WETLANDS.
4. THE BMPS INCLUDED IN THIS PLAN ARE THE MINIMUM REQUIREMENTS FOR ANTICIPATED SITE CONDITIONS. THE APPLICANT IS RESPONSIBLE FOR ENSURING THAT BMPS ARE MODIFIED AS NEEDED FOR UNEXPECTED STORM EVENTS OR OTHER UNFORESEEN CIRCUMSTANCES, AND TO ACCOUNT FOR CHANGING SITE CONDITIONS.
5. ANY AREAS OF DISTURBED SOIL THAT WILL NOT BE WORKED FOR TWO CONSECUTIVE DAYS DURING THE WET SEASON (OCT 1 TO APRIL 30) OR SEVEN DAYS DURING THE DRY SEASON (MAY 1 TO SEPT 30) SHALL BE IMMEDIATELY STABILIZED WITH APPROVED BMPS METHODS (E.G. STRAW, MULCH, PLASTIC COVERING, COLD MIX, ETC.)
6. GRADING AND/OR SOIL DISTURBING ACTIVITIES MAY BE LIMITED OR PROHIBITED FOR CERTAIN SITES SUBJECT TO ECA STANDARDS (I.E. ECA STEEP SLOPES, LANDSLIDE PRONE AREAS, ETC.) BETWEEN OCTOBER 31ST AND APRIL 1ST. VERIFY WITH LOCAL JURISDICTION FOR COMPLIANCE REQUIREMENTS.
7. CITY STREETS AND SIDEWALKS SHALL BE KEPT CLEAN AT ALL TIMES. NO MATERIAL SHALL BE STORED ON CITY STREETS OR SIDEWALKS.
8. POLLUTION CONTROL MEASURES SHALL BE FOLLOWED TO ENSURE THAT NO LIQUID PRODUCTS OR CONTAMINATED WATER ENTERS ANY STORM DRAINAGE FACILITIES OR OTHERWISE LEAVES THE PROJECT SITE. ANY HAZARDOUS MATERIALS OR LIQUID PRODUCTS THAT HAVE THE POTENTIAL TO POLLUTE RUNOFF SHALL BE STORED AND DISPOSED OF PROPERLY.
9. ENSURE THAT WASHOUT FROM CONCRETE TRUCKS IS PERFORMED OFF-SITE OR IN DESIGNATED CONCRETE WASHOUT AREAS ONLY. DO NOT WASH OUT CONCRETE TRUCKS ONTO THE GROUND, OR TO STORM DRAINS OR OPEN DITCHES. DO NOT DUMP EXCESS CONCRETE ONSITE, EXCEPT IN DESIGNATED CONCRETE WASHOUT AREAS.
10. ALL AREAS OF DISTURBED SOIL SHALL BE FULLY STABILIZED WITH THE APPROPRIATE SOIL AMENDMENT AND COVER MEASURES AT COMPLETION OF THE PROJECT. TYPICAL COVER MEASURES INCLUDE LANDSCAPING OR HYDROSEED WITH MULCH.

CONSTRUCTION STORMWATER CONTROL (CSC) PLAN REQUIREMENTS / NARRATIVE

THIS PLAN IS REQUIRED FOR ALL PROJECTS WITH GREATER THAN 750 SQUARE FEET OF LAND DISTURBING ACTIVITIES.

SHOW TEMPORARY AND PERMANENT BEST MANAGEMENT PRACTICES (BMPS) IN THE PLAN VIEW OF THIS SHEET THAT WILL ACCOMPLISH THE MINIMUM REQUIREMENTS DESCRIBED IN THE NARRATIVE BELOW.

THE BMPS SHOWN IN THE PLAN VIEW OF THIS PLAN ARE THE MINIMUM REQUIRED. ADDITIONAL BMPS ARE REQUIRED WHEN MINIMUM CONTROLS ARE NOT SUFFICIENT TO PREVENT EROSION OR TRANSPORT OF SEDIMENT OR OTHER POLLUTANTS FROM THE SITE.

- MARK CLEARING LIMITS
- DELINEATE ENVIRONMENTALLY CRITICAL AREAS
- RETAIN TOP LAYER AND NATIVE VEGETATION
- ESTABLISH CONSTRUCTION ACCESS
- PROTECT DOWNSTREAM PROPERTIES AND RECEIVING WATERS
- PREVENT EROSION AND SEDIMENT TRANSPORT FROM THE SITE
- STABILIZE SOILS
- PROTECT SLOPES
- PROTECT STORM DRAINS
- STABILIZE CHANNEL AND OUTLETS
- CONTROL POLLUTANTS
- CONTROL DEWATERING
- MAINTAIN AND INSPECT BMPs
- EXECUTE CONSTRUCTION STORMWATER CONTROL PLAN
- MINIMIZE OPEN TRENCHES
- PHASE THE PROJECT
- INSTALL PERMANENT FLOW CONTROL AND WATER QUALITY FACILITIES
- PROTECT STORMWATER BMPs PRIOR TO, DURING, AND AFTER CONSTRUCTION

POST CONSTRUCTION SOIL MANAGEMENT PLAN

AT THE END OF PROJECT, ALL AREAS DISTURBED AND NOT COVERED WITH A HARD SURFACE MUST BE AMENDED PER THE SOIL AMENDMENT DETAIL BELOW AND PROBE TO 12-INCHES AT THE SITE FINAL INSPECTION.

➢ LABEL ALL AREAS DISTURBED AND NOT COVERED WITH A HARD SURFACE WITHIN THE SITE AS ONE OF THE FOLLOWING: SA (SOIL AMENDMENT AREA) or ND (NON-DISTURBED AREA). SEE DEFINITIONS BELOW. DO NOT REFERENCE AN ALTERNATE PLAN SHEET.

DEFINITIONS:

- NON-DISTURBED AREA (ND): VEGETATED AREAS THAT WILL NOT BE SUBJECT TO LAND DISTURBING ACTIVITY DO NOT REQUIRE SOIL AMENDMENT IF THEY ARE FENCED AND CONTINUOUSLY PROTECTED THROUGHOUT CONSTRUCTION. THE FENCING MUST BE IN PLACE AT THE FIRST GROUND DISTURBANCE INSPECTION. THIS WILL BE MONITORED BY THE DPD SITE INSPECTOR. NO DISTURBANCE, INCLUDING VEHICLE TRAFFIC OR MATERIAL STORAGE, IS ALLOWED IN THESE AREAS UNTIL FINAL INSPECTION. LABEL THESE AREAS AS (ND) IN THE PLAN VIEW.
- SOIL AMENDMENT AREA (SA): VEGETATED OR COMPOST AREAS (TURF AND LANDSCAPE) MUST BE AMENDED PER THE SOIL AMENDMENT DETAIL AND THE SUBSOIL MUST BE LOOSENED SO IT WILL PROBE TO A DEPTH OF 12 INCHES PRIOR TO SITE FINAL INSPECTION. THIS INCLUDES AREAS IMPACTED BY CLEARING AND GRADING, STOCKPILING, SITE ACCESS, PATHWAYS AND MATERIALS OR EQUIPMENT STORAGE. LABEL THESE AREAS AS (SA) IN THE PLAN VIEW.

ESTIMATED COMPOST REQUIRED FOR SOIL AMENDMENT

[ ] (SQUARE FEET) X 0.0062 = [ ] (CUBIC YARDS)
AREA REQUIRING AMENDMENT (SA) — REQUIRED COMPOST

SOIL AMENDMENT

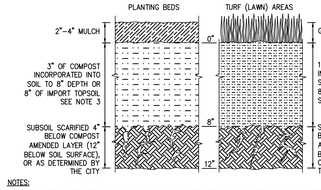

NOTES:
1. POST CONSTRUCTION SOIL AMENDMENT IS REQUIRED ON ALL AREAS NOT COVERED BY IMPERVIOUS SURFACE WHERE SOIL IS DISTURBED DURING CONSTRUCTION.
2. SOIL AMENDMENT MUST PASS A 12 INCH MINIMUM PROBE TEST.
3. IMPORT TOPSOIL, IF USED, MUST MEET THE REQUIREMENTS OF THE 2016 SEATTLE STORMWATER MANUAL, VOL. 1, SECTIONS 5.1.5.1 AND 5.1.5.3.

SYMBOL: (SA) AREA REQUIRING SOIL AMENDMENT (ND) NON-DISTURBED AREA (SOIL AMENDMENT NOT REQUIRED)

FILTER FENCE

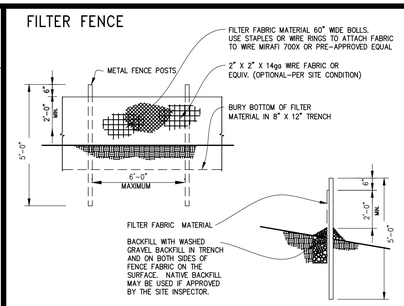

NOTE: ANGLE SILT FENCE BACK UP THE SLOPE AT THE END OF RUN.

SYMBOL: (FF)

STABILIZED CONSTRUCTION ACCESS

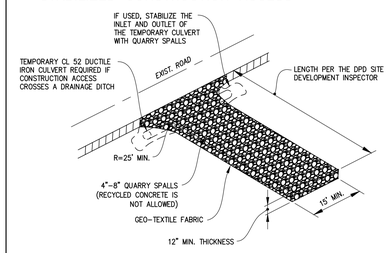

STABILIZED ACCESS SHALL BE USED IN ALL AREAS OF THE SITE WITH VEHICLE TRAFFIC AND PARKING, INCLUDING PLANTING STRIPS. RECYCLED CONCRETE IS NOT ALLOWED.

SYMBOL: (CE)

TREE & VEGETATION PROTECTION

TREE PROTECTION FENCING AND SIGN

1. CHAIN LINK, WIRE MESH, OR SIMILAR OPEN RIGID MATERIAL (NO PLYWOOD)
2. MUST BE INSTALLED PRIOR TO DEMOLITION OR GROUND DISTURBANCE
3. KEPT IN PLACE FOR THE DURATION OF CONSTRUCTION
4. NO SOIL DISTURBANCE OR ACTIVITY ALLOWED WITHIN FENCED AREA: MATERIAL STORAGE/STOCKPILING, PARKING, EXCAVATION, DUMPING, OR WASHING
5. MODIFICATIONS OF THESE REQUIREMENTS BY APPROVAL OF SDCI PLANNER ONLY
6. IF ROOTS GREATER THAN 2 INCH FOUND OUTSIDE OF FENCING, PROTECT BY HAND EXCAVATION AND, IF NECESSARY, CUT CLEANLY AND KEEP MOIST
7. USE 3 INCHES OR DEEPER WOOD CHIP MULCH OUTSIDE FENCED AREAS TO PROTECT FEEDER ROOTS

VEGETATION PROTECTION

1. ORANGE MESH OR SIMILAR OPEN MATERIAL
2. MINIMIZE CONSTRUCTION ZONE
3. PROTECT VEGETATION OUTSIDE CONSTRUCTION ZONE WITH FENCING AS SHOWN
4. USE 3 INCHES OR DEEPER WOOD CHIP MULCH OUTSIDE FENCED AREAS TO PROTECT FEEDER ROOTS

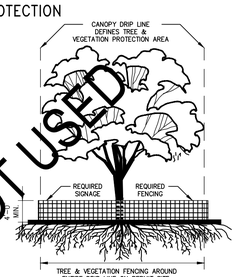

SYMBOL: (VEG)

COMPOST SOCK

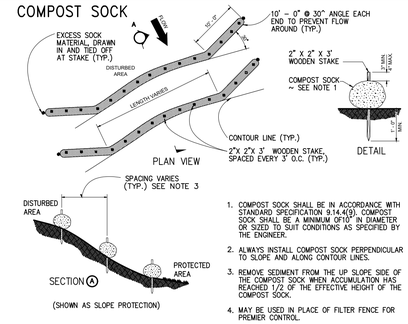

1. COMPOST SOCK SHALL BE IN ACCORDANCE WITH STANDARD SPECIFICATION 9.14.4(9). COMPOST SOCK SHALL BE A MINIMUM OF 10" IN DIAMETER OR SIZED TO SUIT CONDITIONS AS SPECIFIED BY THE ENGINEER.
2. ALWAYS INSTALL COMPOST SOCK PERPENDICULAR TO SLOPE AND ALONG CONTOUR LINES.
3. REMOVE SEDIMENT FROM THE UP SLOPE SIDE OF THE COMPOST SOCK WHEN ACCUMULATION HAS REACHED 1/2 OF THE EFFECTIVE HEIGHT OF THE COMPOST SOCK.
4. MAY BE USED IN PLACE OF FILTER FENCE FOR PREMIER CONTROL.

SYMBOL: (CS)

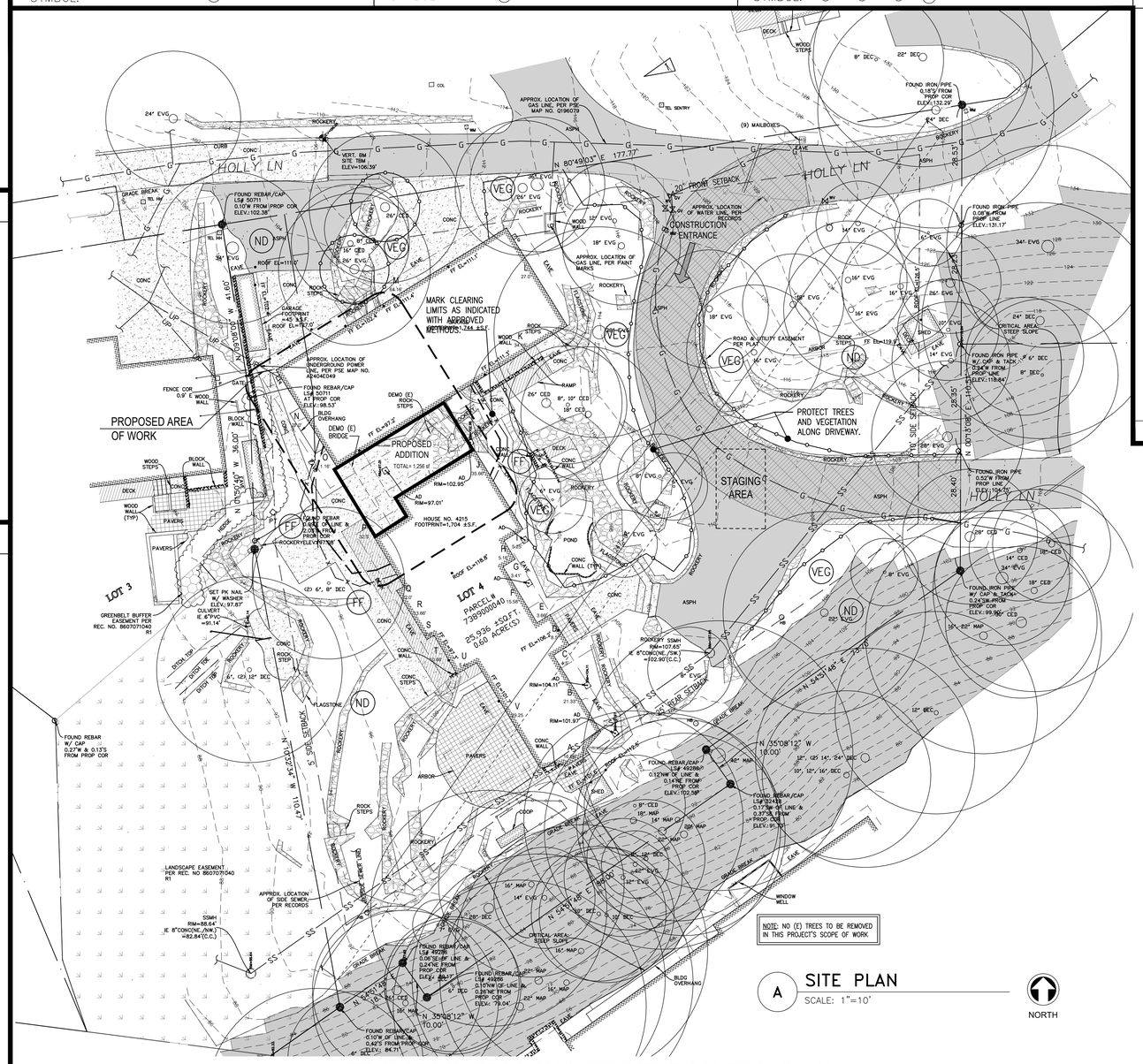

A SITE PLAN
SCALE: 1"=10'

NORTH

STOCKPILE AND EXPOSED SLOPE COVERING

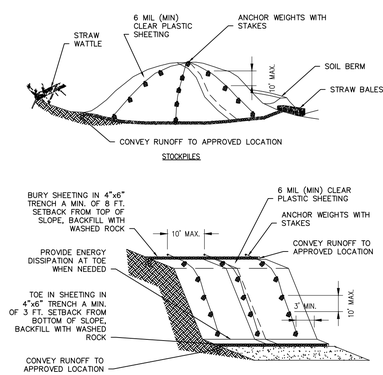

SYMBOL: (SP)

NOTE: REFER TO SHEET T4.0 FOR CITY OF MERCER ISLAND TREE PROTECTION DETAIL AND REQUIREMENTS.

TEMPORARY EROSION & SEDIMENT CONTROL PLAN & POST CONSTRUCTION SOIL MANAGEMENT PLAN

NOTE: THIS PLAN IDENTIFIES THE MINIMUM MEASURES REQUIRED; ADDITIONAL MEASURES MAY BE REQUIRED BASED ON CONSTRUCTION METHODS AND ACTUAL AREA OF DISTURBANCE.

CONSTRUCTION AND REMODELING

TAM CEM - RESIDENCE

Addition & Alteration
4215 Holly Ln, Mercer Island, WA 98040

Permit Set

Job # 24-028

	Description	Date
	Permit Intake	10/07/24
1	Correction 01	02/04/25
2	Correction 02	03/06/25

Permit No.: 2407-213

Drawn:
Stamp/Approval:

Sheet Name:

TESC & SOIL PLAN

Sheet No:

T2.0

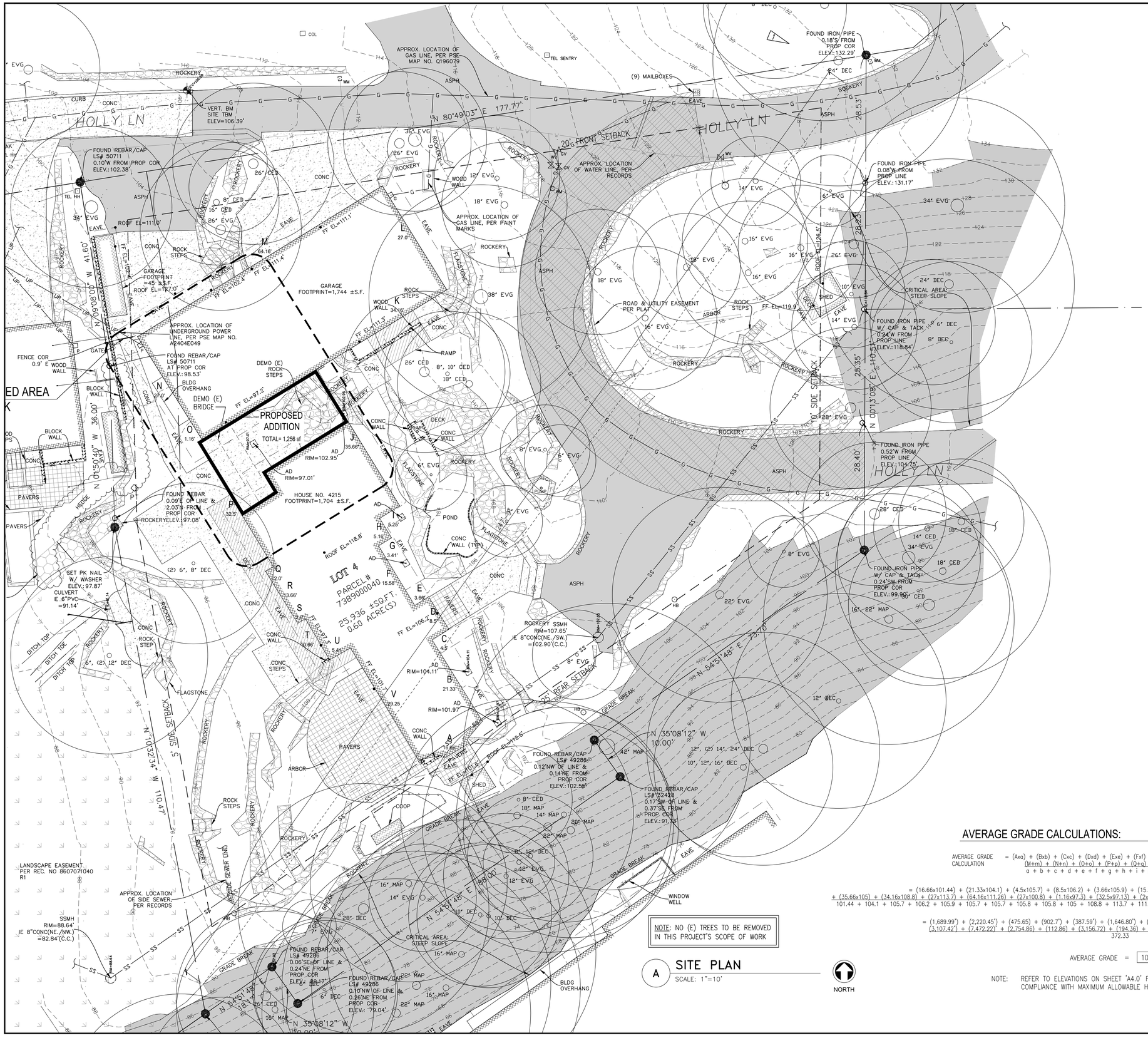

NOTE: NO (E) TREES TO BE REMOVED IN THIS PROJECT'S SCOPE OF WORK

A SITE PLAN
SCALE: 1"=10'

SITE LOT AREA

LOT AREA: (0.58 ACRES) 25,059 S.F.

LOT SLOPE CALCULATIONS:

(HIGHEST ELEVATION POINT OF LOT – LOWEST ELEVATION POINT OF LOT) / HORIZONTAL DISTANCE BETWEEN HIGH AND LOW POINTS = LOT SLOPE

(130–90) / 247 = 16.19% LOT SLOPE

AVERAGE GRADE CALCULATIONS:

AVERAGE GRADE CALCULATION

$$= \frac{(Axa) + (Bxb) + (Cxc) + (Dxd) + (Exe) + (Fxf) + (Gxg) + (Hxh) + (Ixi) + (Jxj) + (Kxk) + (Lxl) + (M+m) + (N+n) + (O+o) + (P+p) + (Q+q) + (R+r) + (S+s) + (T+t) + (U+u) + (V+v)}{a + b + c + d + e + f + g + h + i + j + k + l + m + n + r + s + t + u + v}$$

$$= \frac{(16.66x101.44) + (21.33x104.1) + (4.5x105.7) + (8.5x106.2) + (3.66x105.9) + (15.58x105.7) + (3.41x105.7) + (5.16x105.8) + (5.25x105.8) + (35.66x105) + (34.16x108.8) + (27x113.7) + (64.16x111.26) + (27x100.8) + (1.16x97.3) + (32.5x97.13) + (2x97.18) + (13.66x97.16) + (2x97.19) + (10.66x97.2) + (5.41x101.5) + (29.25x101.6)}{101.44 + 104.1 + 105.7 + 106.2 + 105.9 + 105.7 + 105.7 + 105.8 + 105.8 + 105 + 108.8 + 113.7 + 111.26 + 100.8 + 97.3 + 97.13 + 97.18 + 97.16 + 97.19 + 97.2 + 101.5 + 101.6}$$

$$= \frac{(1,689.99') + (2,220.45') + (475.65) + (902.7') + (387.59') + (1,646.80') + (360.43') + (545.92') + (555.45') + (3,744.3) + (3,716.6') + (3,107.42') + (7,472.22') + (2,754.86) + (112.86) + (3,156.72) + (194.36) + (1,327.20) + (194.38) + (1,327.2) + (549.11) + (2,971.8)}{372.33}$$

AVERAGE GRADE = 105'

NOTE: REFER TO ELEVATIONS ON SHEET 'A4.0' FOR GRAPHICAL DEPICTION OF COMPLIANCE WITH MAXIMUM ALLOWABLE HEIGHT LIMITS

CONSTRUCTION AND REMODELING

TAM CEM - RESIDENCE

Addition & Alteration
4215 Holly Ln, Mercer Island, WA 98040

Permit Set

Job # 24-028

	Description	Date
	Permit Intake	10/07/24
1	Correction 01	02/04/25
2	Correction 02	03/06/25

Permit No.: 2407-213

Drawn:
Stamp/Approval:

Sheet Name:

SITE PLAN

Sheet No:

T3.0

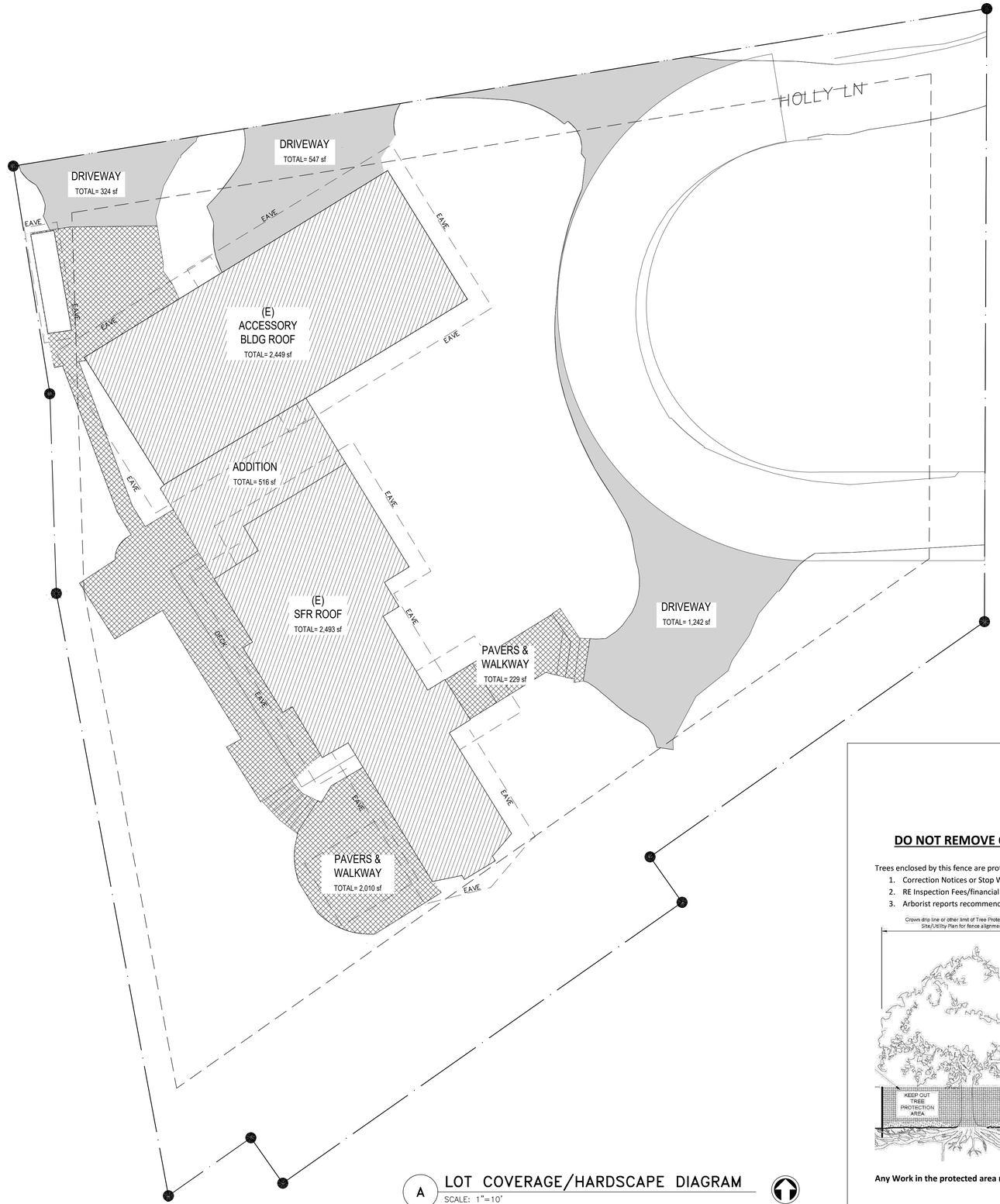

A LOT COVERAGE/HARDSCAPE DIAGRAM

SCALE: 1"=10'

NORTH

SITE LOT AREA

LOT AREA: (0.58 ACRES) 25,059 S.F.

GROSS FLOOR AREA CALCULATION:		
(E) HOUSE 1ST FLOOR LEVEL	1,723	SF
(E) HOUSE BASEMENT FLOOR LEVEL	1,206	SF
(E) DETACHED GARAGE	1,190	SF
(E) EXERCISE ROOM	600	SF
PROPOSED FIRST FLOOR LEVEL ADDITION	713	SF
PROPOSED BASEMENT FLOOR LEVEL ADDITION	455	SF
PROPOSED UPPER FLOOR LEVEL ADDITION	1,256	SF
TOTAL GROSS FLOOR AREA:	7,143	SF
TOTAL LOT SF:	25,059	SF
% OF LOT:	28.5%	OKAY
MAXIMUM ALLOWABLE GROSS AREA:	40%	

MAXIMUM LOT COVERAGE:		
(E) HOUSE ROOF	2,493	SF
(E) ACCESSORY BUILDING ROOF AREA	2,449	SF
PROPOSED ADDITION ROOF	516	SF
(E) DRIVEWAY PAVING	2,113	SF
TOTAL LOT COVERAGE:	7,055	SF
TOTAL LOT SF:	25,059	SF
% OF LOT:	30.21%	
MAXIMUM LOT COVERAGE:	35%	

HARDSCAPE LOT COVERAGE:		
(E) UNCOVERED ELEVATED DECK & BRIDGE	592	SF
(E) UNCOVERED PATIO SW CORNER OF BLDG	484	SF
(E) UNCOVERED DECK & BRIDGE TO BE REMOVED	(141)	SF
(E) WALKWAYS, MAIN ENTRY & BACKYARD	1,753	SF
TOTAL HARDSCAPE LOT COVERAGE:	2,688	SF
TOTAL LOT SF:	25,059	SF
AREA BORROWED FROM LOT COVERAGE:	484	SF
% OF LOT:	10.72%	
MAXIMUM LOT COVERAGE:	9%	

TREE PROTECTION AREA (TPZ)

KEEP OUT!

DO NOT REMOVE OR ADJUST THE APPROVED LOCATION OF THIS TREE PROTECTION AREA

Trees enclosed by this fence are protected and are subject to the conditions of the tree permit. Violation of tree conditions may lead to:

1. Correction Notices or Stop Work Orders until compliance is achieved
2. RE Inspection Fees/financial penalties
3. Arborist reports recommending mitigation

Notes

1. No pruning shall be performed unless under the direction of the Project Arborist. Including limbing trees up.
2. No grading, excavation, storage (materials, equipment, vehicles, etc.), or other unpermitted activity shall occur inside the protective fencing.
3. Penalties for damaging by root damage/compaction or removing a saved tree may be a fine up to three times the value of the tree plus restoration (MICC 19.10.160).
4. Any work in approved TPZ must be with the permission of the Land Use and Planning Division at landuse.planning@mercergov.org
5. 5" course woodchips within the tree protection zone, but not against the tree trunk.

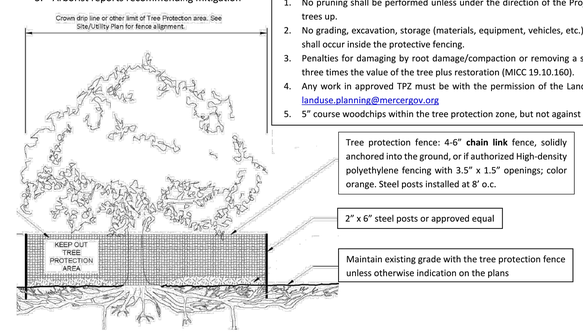

Any Work in the protected area must be with the permission of the Land Use and Planning Division at landuse.planning@mercergov.org

CONSTRUCTION
AND REMODELING

TAM CEM - RESIDENCE

Addition & Alteration

4215 Holly Ln, Mercer Island, WA 98040

Permit Set

Job # 24-028

Description	Date
Permit Intake	10/07/24
1 Correction 01	02/04/25
2 Correction 02	03/06/25

Permit No.: 2407-213

Drawn:

Stamp/Approval:

Sheet Name:

SITE CALCULATIONS

Sheet No:

T4.0

BUILDING THERMAL ENVELOPE PRESCRIPTIVE METHOD:

2021 WASHINGTON STATE ENERGY CODE (WAC 51-11R)
PRESCRIPTIVE COMPONENT TABLE R402.1.3 – ZONE 5 AND MARINE 4

LOCATION	INSULATION REQUIREMENTS
Fenestration[a,j] U-Factor	U=0.30 or Better
Skylight[b] U-Factor	U=0.50 or Better
Ceiling R-Value	R-60 or Better
Ceiling Vaulted[e] R-Value	R-38 or Better
Wood Frame Wall[g,j] R-Value	R-20+5ci or R-13+10ci or Better
Floor R-Value	R-30 or Better
Below-Grade[c,h] Wall R-Value	R-10/15/21 int + 5TB
Slab[d,f] R-Value and Depth	R-10, 4 FT.

For SI: 1 foot = 304.8 mm, ci = continuous insulation, int = intermediate framing.

a. R-values are minimums. U-factors and SHGC are maximums. When insulation is installed in a cavity which is less than the label or design thickness of the insulation, the compressed R-value of the insulation from Appendix A Table A101.4 of chapter 51-11C WAC shall not be less than the R-value specified in the table.

b. The fenestration U-factor column excludes skylights.

c. "10/15/21 +5TB" means R-10 continuous insulation on the exterior of the wall, or R-15 continuous insulation on the interior of the wall, or R-21 cavity insulation plus a thermal break between the slab and the basement wall at the interior of the basement wall. "10/15/21 +5TB" shall be permitted to be met with R-13 cavity insulation on the interior of the basement wall plus R-5 continuous insulation on the interior or exterior of the wall. "5TB" means R-5 thermal break between floor slab and basement wall.

d. R-10 continuous insulation is required under heated slab on grade floors. See Section R402.2.9.1.

e. For single rafter- or joist-vaulted ceilings, the insulation may be reduced to R-38 if the full insulation depth extends over the top plate of the exterior wall.

f. R-7.5 continuous insulation installed over an existing slab is deemed to be equivalent to the required perimeter slab insulation when applied to existing slabs complying with Section R503.1.1. If foam plastic is used, it shall meet the requirements for thermal barriers protecting foam plastics.

g. For log structures developed in compliance with Standard ICC 400, log walls shall meet the requirements for climate zone 5 of ICC 400.

h. Int. (intermediate framing) denotes framing and insulation as described in Section A103.2.2 including standard framing 16 inches on center, 78 percent of the wall cavity insulated and headers insulated with a minimum of R-10 insulation.

i. The first value is cavity insulation, the second value is continuous insulation. Therefore, as an example, R13+10" means R-13 cavity insulation plus R-10 continuous insulation.

j. A maximum U-factor of 0.32 shall apply to vertical fenestration products installed in buildings located above 4000 feet in elevation above sea level, or in windborne debris regions where protection of openings is required under Section R301.2.1.2 of the International Residential Code.

ENERGY CREDITS CODE COMPLIANCE NOTES:

2021 WASHINGTON STATE ENERGY CODE CHAPTER 4
ADDITIONAL ENERGY EFFICIENCY REQUIREMENT PER SECTION R406.2 & R406.3

PROJECT TO MEET "Small Dwelling Unit" REQUIREMENTS OF — 5.0 CREDITS

FROM TABLE 406.2 ENERGY EQUALIZATION CREDITS:

TYPE 4: For heating system using a heat pump that meets federal standards for the equipment listed in Table C403.3.2(2) or C403.3.2(9) — 3.0 CREDITS
or
Air to water heat pump units that are configured to provide both heating and cooling and are rated in accordance with AHRI 550/590

FROM TABLE 406.3 ENERGY CREDITS:

OPTION 2.1: AIR LEAKAGE CONTROL AND EFFICIENT VENTILATION — 1.0 CREDITS
Compliance based on Section R402.4.1.2:
Reduce the tested air leakage to 2.0 air changes per hour maximum at 50 Pascals, or for R-2 Occupancies, optional compliance based on Section R402.4.1.2: Reduce the tested air leakage to 0.25 cfm/ft^2 maximum at 50 Pascals
and
All whole house ventilation requirements as determined by Section M1505.3 of the International Residential Code or Section 403.8 of the International Mechanical Code shall be met with a heat recovery ventilation system with minimum sensible heat recovery efficiency of 0.65.

OPTION 3.3: HIGH EFFICIENCY HVAC — 0.5 CREDITS
Air-source, centrally ducted heat pump with minimum (HSPF 9.5) HSPF2 8.5.

OPTION 7.1: APPLIANCE PACKAGE OPTION — 0.5 CREDITS
All of the following appliances shall be new and installed in the dwelling unit and shall meet the following standards:
1) Dishwasher, standard – Energy Star rated, Most Efficient 2021 or Dishwasher, compact – Energy Star rated (Version 6.0)
2) Refrigerator (if provided) – Energy Star rated (Version 5.1)
3) Washing machine (Residential) – Energy Star rated (Version 8.1)
4) Dryer – Energy Star rated, Most Efficient 2022

NOTE: BUILDER TO COMPLETE AND POST THE BELOW "COMPLIANCE CERTIFICATE" AT DESIGNATED LOCATION FOR FINAL INSPECTION

CUT LINE

CUT LINE

2018 WSEC Residential Energy Compliance Certificate (Effective February 1, 2021)

Property address: _____

Builder/registered design professional name: _____

Builder/reg. design pro. signature: _____

Conditioned floor area: _____ ft^2 (per building permit)

R-Values (R303.1.1)

Ceiling/ Attic:	Vaulted R-_____	Floors:	Over unconditioned space R-_____
	Attic R-_____		Slab-on-grade floor R-_____
Walls:	Above grade R-_____		Fully insulated slab? Y/N (Circle one)
	Below, int. R-_____	Doors:	R-_____, R-_____, R-_____
	Below, ext. R-_____		

U-Value of Windows, Skylights and Doors (R303.1.1.3)

Average area weighted U-value from Glazing Worksheet — Average U- -_____

Fuel Normalization (Tables R406.2) and Energy Credits (Table R406.3)

System Type Number (1 to 5) _____ (Select one)

Energy Credits selected (1 to 7)_____

Fuel Normalization Credit _____ + Total Energy Credits _____ = Total Credits_____

Heating, Cooling and Domestic Hot Water

System	Type (Manufacturer and Model Number)	Efficiency
Heating		
Cooling		
DHW		
Drain water heat recovery		

Onsite Renewable Energy Electric Power System

System type _____ System design capacity _____ kW

Rated annual generation _____ kWh/yr

Appliances	Manufacturer and Model	Energy Star? (Circle one)
Dish washer		Y or N
Refrigerator		Y or N
Washer		Y or N
Dryer		Y or N

Vented or unvented? If vented, CEF rating _____

Gas fireplace / heating stove (Section R402.4.2) — Fireplace efficiency (FE) _____

Heating or Decorative? (Circle one)

CUT LINE

HVAC System Duct Leakage Testing (R403.3)	Circle one
All ductwork and air handler in conditioned space? (See Option 4.2)	Y or N
All ductwork in unconditioned spaces buried and tested at 3% total leakage, and air handler in conditioned space? (See Option 4.1.)	Y or N
All ductwork & air handler outside conditioned space insulated to minimum R-8?	Y or N
Air handler present at duct leakage test? (Total leakage 4% if yes, 3% if no)	Y or N
HVAC leakage to outside test conducted at final?	Y or N
Do HVAC duct leakage tests include GPS and time stamp verification?	Y or N

HVAC system leakage test calculated design target: _____ CFM @ 25 Pa

HVAC system leakage test measured results: _____ CFM @ 25 Pa

Building Leakage Testing (R402.4.1.2)

Dwelling unit leakage test calculated design target: _____ ACH @ 50 Pa

Dwelling unit leakage test, measured results: _____ ACH @ 50 Pa

Whole Building Leakage test (R2 corridor only) design target: _____ CFM/sf @ 50 Pa

Whole Building Leakage test (R2 corridor only) measured: _____ CFM/sf @ 50 Pa

Do building leakage tests include GPS and time stamp verification? — Y or N

Whole House Ventilation System Measured Flow Rates (M1505.4 IRC-WA)	Circle one
Are the system controls correctly labeled?	Y or N
The Whole House Ventilation (WHV) system operation and maintenance (O&M) instructions were provided to the building owner?	Y or N

Provided to: _____ on _____(date)

Whole House Ventilation System Type: (Circle one)

(1) Whole house exhaust fan, location _____

(2) Balanced HRV/ ERV, location _____

For R2 low-rise, serves more than one unit? — Y or N

(3) Supply or HRV WHV integral to the air handler. Describe system control sequence of operations or reference to design submittal: _____

Specify run-time: _____ hours per day — _____ CFM

WHV calculated design minimum flow rate per plan submittal:

WHV measured min flow rate at commissioning: Exhaust _____CFM, Supply _____CFM

Do WHV flow tests include GPS & time stamp verification? — Y or N

HRV/ERV sensible heat recovery efficiency: _____

Commissioning Notes:

Other Mandatory Requirements	Circle one
All other mandatory requirements of WSEC-R have been met?	Y or N

CUT LINE

CUT LINE

CUT LINE

CONSTRUCTION
AND REMODELING

TAM CEM - RESIDENCE

Addition & Alteration
4215 Holly Ln, Mercer Island, WA 98040

Permit Set

Job # 24-028

Description	Date
Permit Intake	10/07/24
1 Correction 01	02/04/25
2 Correction 02	03/06/25

Permit No.: 2407-213

Drawn:
Stamp/Approval:

Sheet Name:

ENERGY FORM

Sheet No:

T5.0

WHOLE HOUSE MECHANICAL VENTILATION (M1505.4):

EACH DWELLING UNIT SHALL BE EQUIPPED WITH A VENTILATION SYSTEM. THE WHOLE–HOUSE MECHANICAL VENTILATION SYSTEMS SHALL BE DESIGNED IN ACCORDANCE WITH SECTIONS M1505.4.1 THROUGH M1505.4.4.

M1505.4.1 SYSTEM DESIGN

THE WHOLE–HOUSE VENTILATION SYSTEM SHALL CONSIST OF ONE OR MORE SUPPLY FANS, ONE OR MORE EXHAUST FANS, OR AN ERV/HRV WITH INTEGRAL FANS, ASSOCIATED DUCTS AND CONTROLS. WHOLE–HOUSE MECHANICAL VENTILATION SYSTEM WITH SUPPLY AND EXHAUST FANS PER SECTIONS M1505.4.1.2, M1505.4.1.3, M1505.4.1.4, AND M1505.4.1.5. LOCAL EXHAUST FANS ARE PERMITTED TO SERVE AS PART OF THE WHOLE–HOUSE VENTILATION SYSTEM WHEN PROVIDED WITH THE PROPER CONTROLS PER SECTION M1505.4.2. THE SYSTEMS SHALL BE DESIGNED AND INSTALLED TO EXHAUST AND/OR SUPPLY THE MINIMUM OUTDOOR AIRFLOW RATES PER SECTION M1505.4.3 AS MODIFIED BY THE WHOLE–HOUSE VENTILATION SYSTEM COEFFICIENTS IN SECTION M1505.4.3.1 WHERE APPLICABLE. THE WHOLE–HOUSE VENTILATION SYSTEM SHALL OPERATE CONTINUOUSLY AT THE MINIMUM VENTILATION RATE DETERMINED PER SECTION M1505.4.2 UNLESS CONFIGURED WITH INTERMITTENT OFF CONTROLS PER SECTION M1505.4.3.2.

M1505.4.1.1 WHOLE–HOUSE SYSTEM COMPONENT REQUIREMENTS

WHOLE–HOUSE VENTILATION SUPPLY AND EXHAUST FANS SPECIFIED IN THIS SECTION SHALL HAVE A MINIMUM EFFICACY AS PRESCRIBED IN THE WASHINGTON STATE ENERGY CODE. DESIGN AND INSTALLATION OF THE SYSTEM OR EQUIPMENT SHALL BE CARRIED OUT IN ACCORDANCE WITH MANUFACTURERS' INSTALLATION INSTRUCTIONS. WHOLE–HOUSE VENTILATION FANS SHALL BE RATED FOR SOUND AT NO LESS THAN THE MINIMUM AIRFLOW RATE REQUIRED BY SECTION M1505.4.3.1. VENTILATION FANS SHALL BE RATED FOR SOUND AT A MAXIMUM OF 1.0 SONE. THIS SOUND RATING SHALL BE AT A MINIMUM OF 0.1 IN. W.C. (25 PA) STATIC PRESSURE IN ACCORDANCE WITH HVI PROCEDURES SPECIFIED IN SECTIONS M1505.4.1.2 AND M1505.4.1.3.

EXCEPTION: HVAC AIR HANDLERS, ERV/HRV UNITS, AND REMOTE MOUNTED FANS NEED NOT MEET THE SOUND REQUIREMENTS. TO BE CONSIDERED FOR THIS EXCEPTION, A REMOTE MOUNTED FAN MUST BE MOUNTED OUTSIDE THE HABITABLE SPACES, BATHROOMS, TOILETS, AND HALLWAYS, AND THERE MUST BE AT LEAST 4 FEET (1.3 M) OF DUCTWORK BETWEEN THE FAN AND THE INTAKE GRILLE.

THE WHOLE–HOUSE SUPPLY FAN SHALL PROVIDE DUCTED OUTDOOR VENTILATION AIR TO EACH HABITABLE SPACE WITHIN THE RESIDENTIAL UNIT.

EXCEPTION: INTERIOR JOINING SPACES PROVIDED WITH A 30 CFM WHOLE–HOUSE TRANSFER FAN OR A PERMANENT OPENING WITH AN AREA OF NOT LESS THAN 8 PERCENT OF THE FLOOR AREA OF THE INTERIOR ADJOINING SPACE BUT NOT LESS THAN 25 SQUARE FEET DO NOT REQUIRE DUCTED OUTDOOR VENTILATION AIR TO BE SUPPLIED DIRECTLY TO THE SPACE. WHOLE–HOUSE TRANSFER FANS SHALL MEET THE SONE RATING OF SECTION M1505.4.1.1 AND SHALL HAVE WHOLE–HOUSE VENTILATION CONTROLS THAT COMPLY WITH SECTION M1505.4.2.

M1505.4.1.2 EXHAUST FANS

EXHAUST FANS REQUIRED SHALL BE DUCTED DIRECTLY TO THE OUTSIDE. EXHAUST AIR OUTLETS SHALL BE DESIGNED TO LIMIT THE PRESSURE DIFFERENCE TO THE OUTSIDE AND EQUIPPED WITH BACKDRAFT DAMPERS OR MOTORIZED DAMPERS IN ACCORDANCE WITH THE WASHINGTON STATE ENERGY CODE. EXHAUST FANS SHALL BE TESTED AND RATED IN ACCORDANCE WITH THE AIRFLOW AND SOUND RATING PROCEDURES OF THE HOME VENTILATING INSTITUTE (HVI 915, HVI LOUDNESS TESTING AND RATING PROCEDURE, HVI 916, HVI AIRFLOW TEST PROCEDURE, AND HVI 920, HVI PRODUCT PERFORMANCE CERTIFICATION PROCEDURE, AS APPLICABLE). EXHAUST FANS REQUIRED IN THIS SECTION MAY BE USED TO PROVIDE LOCAL VENTILATION. BATHROOM EXHAUST FANS THAT ARE DESIGNED FOR INTERMITTENT EXHAUST AIRFLOW RATES HIGHER THAN THE CONTINUOUS EXHAUST AIRFLOW RATES IN TABLE M1505.4.3.2 SHALL BE PROVIDED WITH OCCUPANCY SENSORS OR HUMIDITY SENSORS TO AUTOMATICALLY OVERRIDE THE FAN TO THE HIGH SPEED AIRFLOW RATE. THE EXHAUST FANS SHALL BE TESTED AND THE TESTING RESULTS SHALL BE SUBMITTED AND POSTED IN ACCORDANCE WITH SECTION M1505.4.1.6.

M1505.4.1.3 SUPPLY FANS

SUPPLY FANS USED IN MEETING THE REQUIREMENTS OF THIS SECTION SHALL SUPPLY OUTDOOR AIR FROM INTAKE OPENINGS IN ACCORDANCE WITH THE INTERNATIONAL MECHANICAL CODE SECTIONS 401.4 AND 401.5. WHEN DESIGNED FOR INTERMITTENT OFF OPERATION, SUPPLY SYSTEMS SHALL BE EQUIPPED WITH MOTORIZED DAMPERS IN ACCORDANCE WITH THE WASHINGTON STATE ENERGY CODE. SUPPLY FANS SHALL BE TESTED AND RATED IN ACCORDANCE WITH THE AIRFLOW AND SOUND RATING PROCEDURES OF THE HOME VENTILATING INSTITUTE (HVI 915, HVI LOUDNESS TESTING AND RATING PROCEDURE, HVI 916, HVI AIRFLOW TEST PROCEDURE, AND HVI 920, HVI PRODUCT PERFORMANCE CERTIFICATION PROCEDURE, AS APPLICABLE). WHERE OUTDOOR AIR IS PROVIDED BY SUPPLY FAN SYSTEMS THE OUTDOOR AIR SHALL BE FILTERED. THE FILTER SHALL BE ACCESSIBLE FOR REGULAR MAINTENANCE AND REPLACEMENT. THE FILTER SHALL HAVE A MINIMUM EFFICIENCY RATING VALUE (MERV) OF AT LEAST 8.

M1505.4.1.4 BALANCED WHOLE–HOUSE VENTILATION SYSTEM

A BALANCED WHOLE–HOUSE VENTILATION SYSTEM SHALL INCLUDE BOTH SUPPLY AND EXHAUST FANS. THE SUPPLY AND EXHAUST FANS SHALL HAVE AIRFLOW THAT IS WITHIN 10 PERCENT OF EACH OTHER. THE TESTED AND BALANCED TOTAL MECHANICAL EXHAUST AIRFLOW RATE IS WITHIN 10 PERCENT OR 5 CFM, WHICHEVER IS GREATER, OF THE TOTAL MECHANICAL SUPPLY AIRFLOW RATE. THE FLOW RATE TEST RESULTS SHALL BE SUBMITTED AND POSTED IN ACCORDANCE WITH SECTION M1505.4.1.7. THE EXHAUST FAN SHALL MEET THE REQUIREMENTS OF SECTION M1505.4.1.2. THE SUPPLY FAN SHALL MEET THE REQUIREMENTS OF SECTION M1505.4.1.3. BALANCED VENTILATION SYSTEMS WITH BOTH SUPPLY AND EXHAUST FANS IN A PACKAGED PRODUCT, SUCH AS AN ERV/HRV SHALL MEET THE REQUIREMENTS OF HVI 920, AS APPLICABLE. LOCAL EXHAUST SYSTEMS THAT ARE NOT A COMPONENT OF THE WHOLE–HOUSE MECHANICAL VENTILATION SYSTEM ARE EXEMPT FROM THE BALANCED AIRFLOW CALCULATION.

M1505.4.1.5 FURNACE INTEGRATED SUPPLY

SYSTEMS USING SPACE HEATING AND/OR COOLING AIR HANDLER FANS FOR OUTDOOR AIR SUPPLY DISTRIBUTION ARE NOT PERMITTED.

EXCEPTION: AIR HANDLER FANS SHALL HAVE MULTISPEED OR VARIABLE SPEED SUPPLY AIRFLOW CONTROL CAPABILITY WITH A LOW SPEED OPERATION NOT GREATER THAN 25 PERCENT OF THE RATED SUPPLY AIRFLOW CAPACITY DURING VENTILATION ONLY OPERATION. OUTDOOR AIR INTAKE OPENINGS MUST MEET THE PROVISIONS OF SECTIONS R303.5 AND R303.6 AND MUST INCLUDE A MOTORIZED DAMPER THAT IS ACTIVATED BY THE WHOLE–HOUSE VENTILATION SYSTEM CONTROLLER. THE MOTORIZED DAMPER MUST BE CONTROLLED TO MAINTAIN THE OUTDOOR AIRFLOW INTAKE AIRFLOW WITHIN 10 PERCENT OF THE WHOLE–HOUSE MECHANICAL EXHAUST AIRFLOW RATE. THE FLOW RATE FOR THE OUTDOOR AIR INTAKE MUST BE TESTED AND VERIFIED AT THE MINIMUM VENTILATION FAN SPEED AND THE MAXIMUM HEATING OR COOLING FAN SPEED. THE RESULTS OF THE TEST SHALL BE SUBMITTED AND POSTED IN ACCORDANCE WITH SECTION M1505.4.1.7.

M1505.4.1.6 TESTING

WHOLE–HOUSE MECHANICAL VENTILATION SYSTEMS SHALL BE TESTED, BALANCED AND VERIFIED TO PROVIDE A FLOW RATE NOT LESS THAN THE MINIMUM REQUIRED BY SECTIONS M1505.4.3 AND M1505.4.4.1. TESTING SHALL BE PERFORMED ACCORDING TO THE VENTILATION EQUIPMENT MANUFACTURER'S INSTRUCTIONS, OR

WHOLE HOUSE MECHANICAL VENTILATION (M1505.4):

BY USING A FLOW HOOD, FLOW GRID, OR OTHER AIRFLOW MEASURING DEVICE AT THE MECHANICAL VENTILATION FAN'S INLET TERMINALS, OUTLET TERMINALS OR GRILLES OR IN THE CONNECTED VENTILATION DUCTS. WHERE REQUIRED BY THE BUILDING OFFICIAL, TESTING SHALL BE CONDUCTED BY AN APPROVED THIRD PARTY. A WRITTEN REPORT OF THE RESULTS OF THE TEST SHALL BE SIGNED BY THE PARTY CONDUCTING THE TEST AND PROVIDED TO THE BUILDING OFFICIAL AND BE POSTED IN THE DWELLING UNIT PER SECTION M1505.4.1.7.

M1505.4.1.7 CERTIFICATE

A PERMANENT CERTIFICATE SHALL BE COMPLETED BY THE MECHANICAL CONTRACTOR, TEST AND BALANCE CONTRACTOR OR OTHER APPROVED PARTY AND POSTED ON A WALL IN THE SPACE WHERE THE FURNACE IS LOCATED, A UTILITY ROOM, OR AN APPROVED LOCATION INSIDE THE BUILDING. WHEN LOCATED ON AN ELECTRICAL PANEL, THE CERTIFICATE SHALL NOT COVER OR OBSTRUCT THE VISIBILITY OF THE CIRCUIT DIRECTORY LABEL, SERVICE DISCONNECT LABEL, OR OTHER REQUIRED LABELS. THE CERTIFICATE SHALL LIST THE FLOW RATE DETERMINED FROM THE DELIVERED AIRFLOW OF THE WHOLE–HOUSE MECHANICAL VENTILATION SYSTEM AS INSTALLED AND THE TYPE OF MECHANICAL WHOLE–HOUSE VENTILATION SYSTEM USED TO COMPLY WITH SECTION M1505.4.3.1.

M1505.4.2 SYSTEM CONTROLS

THE WHOLE–HOUSE MECHANICAL VENTILATION SYSTEM SHALL BE PROVIDED WITH CONTROLS THAT COMPLY WITH THE FOLLOWING:

1. THE WHOLE–HOUSE VENTILATION SYSTEM SHALL BE CONTROLLED WITH MANUAL SWITCHES, TIMERS OR OTHER MEANS THAT PROVIDE FOR AUTOMATIC OPERATION OF THE VENTILATION SYSTEM THAT ARE READILY ACCESSIBLE BY THE OCCUPANT;
2. WHOLE–HOUSE MECHANICAL VENTILATION SYSTEM SHALL BE PROVIDED WITH CONTROLS THAT ENABLE MANUAL OVERRIDE OFF OF THE SYSTEM BY THE OCCUPANT DURING PERIODS OF POOR OUTDOOR AIR QUALITY. CONTROLS SHALL INCLUDE PERMANENT TEXT OR A SYMBOL INDICATING THEIR FUNCTION. RECOMMENDED CONTROL PERMANENT LABELING TO INCLUDE TEXT SIMILAR TO THE FOLLOWING: "LEAVE ON UNLESS OUTDOOR AIR QUALITY IS VERY POOR." MANUAL CONTROLS SHALL BE READILY ACCESSIBLE BY THE OCCUPANT;
3. WHOLE–HOUSE VENTILATION SYSTEMS SHALL BE CONFIGURED TO OPERATE CONTINUOUSLY EXCEPT WHERE INTERMITTENT OFF CONTROLS AND SIZING ARE PROVIDED IN ACCORDANCE WITH SECTION M1505.4.3.2.

M1505.4.3 MECHANICAL VENTILATION RATE

THE WHOLE–HOUSE MECHANICAL VENTILATION SYSTEM SHALL PROVIDE OUTDOOR AIR AT A CONTINUOUS RATE AS DETERMINED IN ACCORDANCE WITH TABLE M1505.4.3(1) OR EQUATION 15–1.

EQUATION 15–1

VENTILATION RATE IN CUBIC FEET PER MINUTE = (0.01 x TOTAL SQUARE FOOT AREA OF HOUSE) + [7.5 x (NUMBER OF BEDROOMS + 1)] BUT NOT LESS THAN 30 CFM FOR EACH DWELLING UNIT.

TABLE M1505.4.3(1)
CONTINUOUS WHOLE–HOUSE MECHANICAL VENTILATION SYSTEM AIRFLOW RATE REQUIREMENTS

DWELLING UNIT FLOOR AREA (SQUARE FEET)	NUMBER OF BEDROOMS				
	0–1	2	3	4	5 OR MORE
	AIRFLOW IN CFM				
< 500	30	30	35	45	50
501–1,000	30	35	40	50	55
1,001–1,500	30	40	45	55	60
1,501–2,000	35	45	50	60	65
2,001–2,500	40	50	55	65	70
2,501–3,000	45	55	60	70	75
3,001–3,500	50	60	65	75	80
3,501–4,000	55	65	70	80	85
4,001–4,500	60	70	75	85	90
4,501–5,000	65	75	80	90	95

For SI: 1 square foot = 0.0929 m2, 1 cubic foot per minute = 0.0004719 m^3/s.

TABLE M1505.4.3(2)
SYSTEM COEFFICIENT (C_{SYSTEM})

SYSTEM TYPE	DISTRIBUTED	NOT DISTRIBUTED
BALANCE	1.0	1.25
NOT BALANCED	1.25	1.5

M1505.4.3.2 INTERMITTENT OFF OPERATION

WHOLE–HOUSE MECHANICAL VENTILATION SYSTEMS SHALL BE PROVIDED WITH ADVANCED CONTROLS THAT ARE CONFIGURED TO OPERATE THE SYSTEM WITH INTERMITTENT OFF OPERATION SHALL OPERATE FOR A LEAST TWO HOURS IN EACH FOUR–HOUR SEGMENT. THE WHOLE–HOUSE VENTILATION AIRFLOW RATE DETERMINED IN ACCORDANCE WITH SECTION M1505.4.3 AS CORRECTED BY SECTION M1505.4.3.1 IS MULTIPLIED BY THE FACTOR DETERMINED IN ACCORDANCE WITH TABLE M1505.4.3.2.

TABLE M1505.4.3.2
INTERMITTENT WHOLE–HOUSE MECHANICAL VENTILATION RATE FACTORS[a, b]

RUN–TIME PERCENTAGE IN EACH 4–HOUR SEGMENT	50%	66%	75%	100%
FACTOR[a]	2	1.5	1.3	1.0

a. For ventilation system run time values between those given, the factors are permitted to be determined by interpolation.

b. Extrapolation beyond the table is prohibited.

M1505.4.4 LOCAL EXHAUST RATES

LOCAL EXHAUST SYSTEMS SHALL BE DESIGNED TO HAVE THE CAPACITY TO EXHAUST THE MINIMUM AIRFLOW RATE DETERMINED IN ACCORDANCE WITH TABLE M1505.4.4(1). IF THE LOCAL EXHAUST FAN IS INCLUDED IN THE WHOLE–HOUSE VENTILATION SYSTEM, IN ACCORDANCE WITH SECTION 1505.4.1, THEN THE EXHAUST FAN SHALL BE CONTROLLED TO OPERATE AS SPECIFIED IN SECTION M1505.4.2.

TABLE M1505.4.4(1)
MINIMUM REQUIRED LOCAL EXHAUST RATES FOR ONE– AND TWO–FAMILY DWELLINGS

AREA TO BE EXHAUSTED	EXHAUST RATES	
	INTERMITTENT	CONTINUOUS
KITCHEN	100 CFM	30 CFM
BATHROOM – TOILET ROOMS	50 CFM	20 CFM

NOTE: REFER TO TABLE M1505.4.4.(2) FOR PRESCRIPTIVE EXHAUST DUCT SIZING.

EMERGENCY ESCAPE AND RESCUE:

ONE WINDOW (OR DOOR) IN THE BASEMENT, A HABITABLE ATTIC, AND IN EACH BEDROOM, MUST MEET THESE REQUIREMENTS (IRC R310):

- THE MINIMUM NET CLEAR OPEN AREA IS 5.7 SQUARE FEET, (HOWEVER, OPENINGS AT GRADE FLOOR MAY BE A MINIMUM OF 5 SQUARE FEET).
- THE MINIMUM CLEAR OPEN WIDTH IS 20"
- THE MINIMUM CLEAR OPEN HEIGHT IS 24"
- THE MAXIMUM ALLOWED SILL HEIGHT IS 44"
- THE INSIDE OF THE WINDOW WELLS MUST BE A MINIMUM OF 9 SQUARE FEET IN AREA, WITH A MINIMUM 3' WIDTH, AND MUST ALLOW THE WINDOW TO OPEN ALL THE WAY. A LADDER IS REQUIRED IF THE BOTTOM OF THE WINDOW WELL IS MORE THAN 44" BELOW THE ADJACENT GROUND.
- WINDOW OPENING CONTROL DEVICES CANNOT BE LOCATED MORE THAN 70" ABOVE THE FINISHED FLOOR.

SAFETY GLAZING FOR DOORS & WINDOWS:

SAFETY GLAZING IS GENERALLY REQUIRED AS FOLLOWS (IRC R308.4):

- GLAZING IN OR WITHIN 24" OF THE ARC OF A DOOR.
- GLAZING CLOSE TO THE FLOOR.
- GLAZING ADJACENT TO STAIRS AND STAIR LANDINGS.
- GLAZING NEAR WET FLOOR SURFACES.

ROOF VENTILATION:

VENTILATION IS REQUIRED ON THE COLD SIDE OF ATTIC/ROOF INSULATION (IRC R806). SEE IRC R806.5 FOR UNVENTED ROOF CONSTRUCTION REQUIREMENTS

- THE VENTILATION OPENINGS MUST HAVE AT LEAST 1 SQUARE FOOT OF VENTING PER 150 SQUARE FEET OF AREA BEING VENTED. THIS CAN BE REDUCED TO 1 SQUARE FOOT OF VENTING PER 300 SQUARE FEET OF ARE TO BE VENTED IF YOU PROVIDE VENTILATORS IN THE UPPER PORTION OF THE AREA TO BE VENTED.
- THE VENT MUST HAVE AT LEAST 1" OF AIR SPACE ABOVE THE ROOF INSULATION.
- CROSS–VENTILATION IS REQUIRED.

ATTIC ACCESS:

ATTIC ACCESS (IRC R807).

- THE ATTIC OPENING MUST BE AT LEAST 22" X 30".
- THE ATTIC HEADROOM MUST BE AT LEAST 30" AT THE ACCESS POINT TO THE ATTIC.

CRAWL SPACE VENTILATION:

VENTILATION IS REQUIRED IN CRAWLSPACE (IRC R408).

- CROSS–VENTILATION IS REQUIRED IN CRAWL SPACES. (SEE ALSO SRC R317.1 FOR CRAWL SPACE CLEAR HEIGHTS: 18" MINIMUM FOR JOISTS; 12" MINIMUM FOR WOOD GIRDERS WITHOUT PRESSURE TREATING.)
- THE MINIMUM AREA OF CROSS–VENTILATION OPENINGS IS 1 SQUARE FOOT PER 300 SQUARE FEET OF CRAWL SPACE AREA.

CRAWL SPACE ACCESS:

CRAWLSPACE ACCESS (IRC R408.4).

- THE MINIMUM CRAWL SPACE ACCESS OPENING IS 24" X 18" THROUGH A FLOOR OR 24"X 16" THROUGH THE WALL.

FIRE & DRAFTSTOPS:

(IRC R302.11 AND I302.12)

- FIREBLOCKING AND DRAFT STOPS ARE REQUIRED IN FLOORCEILINGASSEMBLIES SO THAT THE CONCEALED SPACE DOES NOT EXCEED 1,000 SQUARE FEET.
- FIRE BLOCKS ARE REQUIRED BETWEEN CONNECTED, CONCEALED SPACES PER R302.11.

ROOM DIMENSION REQUIREMENTS:

(IRC R304 AND R305):

- THE REQUIRED CEILING HEIGHT IS 7'–0" MINIMUM FOR HABITABLE SPACES. THE MINIMUM CEILING HEIGHT FOR BATHROOMS, LAUNDRY ROOMS, BASEMENTS AND HALLWAYS IS 6 FEET 8 INCHES.
- ROOMS WITH SLOPED CEILINGS MUST MEET THE MINIMUM HEIGHT FOR AT LEAST 50% OF THE AREA (AREAS WITH CEILINGS LESS THAN 5' HIGH DON'T COUNT TOWARDS THE MINIMUM REQUIRED ROOM AREA).
- WHEN A BATHROOM HAS A SLOPING CEILING, A MINIMUM 6'–8" HEIGHT AT THE CENTER LINE OF BATHROOM FIXTURES IS REQUIRED.
- HABITABLE ROOMS SHALL BE NOT LESS THAN 70 SQUARE FEET (EXCEPT KITCHENS).
- HABITABLE ROOMS SHALL NOT BE LESS THAN 7'–0" IN ANY HORIZONTAL DIRECTION (NOT REQUIRED FOR CLOSETS, STORAGE, KITCHENS OR UTILITY ROOMS).

BUILDING SEPARATION REQUIREMENTS:

FOR WALLS, OPENINGS AND EAVES CLOSE TO THE PROPERTY LINE YOU NEED TO FOLLOW THESE SEPARATION REQUIREMENTS (IRC R302.1):

- A ONE–HOUR FIRE–RATED WALL IS REQUIRED IF THE WALL IS LESS THAN 5' FROM THE PROPERTY LINE. (CARPORT POSTS DEFINE AN EXTERIOR WALL, AND THE SPACE BETWEEN POSTS IS CONSIDERED AN OPENING.) SEE THE DESCRIPTION IN THE ADJACENT BOX FOR A TYPICAL ONE HOUR RATED WALL.
- NO OPENINGS (DOORS AND WINDOWS) ARE ALLOWED IN WALLS LESS THAN 3' FROM THE PROPERTY LINE.
- OPENINGS IN THE WALL CAN'T EXCEED 25% OF THE TOTAL WALL AREA OF THE STORY IN WALLS THAT ARE 3' TO 5' FROM THE PROPERTY LINE.
- EAVES ARE NOT ALLOWED TO BE CLOSER THAN 2' TO THE PROPERTY LINE.
- UNDER–EAVE OR SOFFIT VENTS ARE NOT ALLOWED IN EAVES LESS THAN 5' FROM THE PROPERTY LINE; INSTEAD, SOLID BLOCKING IS REQUIRED FROM THE TOP OF THE WALL FRAMING TO THE ROOF SHEATHING.

GARAGE FIRE SEPARATION REQUIREMENT:

(IRC R302.5.1 AND TABLE R302.6):

- 1/2" REGULAR GYPSUM BOARD (ON THE GARAGE SIDE) IS REQUIRED AT WALLS SEPARATING THE GARAGE FROM THE DWELLING, INCLUDING GARAGES LESS THAN 3' FROM A DWELLING UNIT ON THE SAME LOT.
- WHEN A DWELLING IS ABOVE A GARAGE, THE GARAGE CEILINGS MUST BE COVERED WITH 5/8" TYPE X GYPSUM BOARD. THE STRUCTURE SUPPORTING THE DWELLING UNIT (WALLS, BEAMS AND POSTS) MUST BE COVERED WITH 1/2" REGULAR GYPSUM BOARD.
- DOORS BETWEEN A GARAGE AND A DWELLING MUST BE 1–3/8" THICK (MINIMUM) SOLID WOOD OR STEEL (SOLID OR HONEY–COMB CORE), OR BE A 20–MINUTE FIRE–RATED DOOR. THE DOOR MUST ALSO BE SELF–CLOSING.
- NO FIRE SEPARATION IS REQUIRED BETWEEN A CARPORT AND DWELLING UNIT. (CARPORTS HAVE AT LEAST TWO OPEN SIDES WITH NO PORTION OF THE DWELLING LOCATED ABOVE. SEE R309.2).

STAIR REQUIREMENTS:

STAIRS MUST MEET THE FOLLOWING REQUIREMENTS (IRC R311.7).

- MINIMUM OF 36' CLEAR WIDTH.
- MAXIMUM OF 7–3/4" RISER (HEIGHT OF EACH STEP).
- MINIMUM OF 10" TREAD DEPTH (A TREAD NOSING MAY BE REQUIRED).
- MINIMUM OF 6'–8" HEADROOM CLEAR.
- HANDRAIL WITH A 34"–38" HEIGHT.
- HANDRAIL GRASPING DIMENSION OF AT LEAST 1–1/4" AND NO MORE THAN 2".
- WINDING STAIR TREADS: EACH STEP MUST BE AT LEAST 10" MEASURED 12" FROM THE NARROWEST POINT AND AT LEAST 6" AT THE NARROWEST POINT.

GUARDRAILS & WINDOW FALL PROTECTION:

GUARDRAILS MUST MEET THE FOLLOWING REQUIREMENTS (IRC R312).

- A GUARD (GUARDRAIL) IS REQUIRED FOR WALKING SURFACES 30" ABOVE ADJACENT GRADE OR FLOOR.
- MINIMUM OF 36" FOR THE GUARD HEIGHT.
- MAXIMUM OF 4" CLEAR SPACE BETWEEN INTERMEDIATE RAILS IN GUARDS.
- FALL PROTECTION IS REQUIRED FROM OPERABLE WINDOWS MORE THAN 6 FEET ABOVE GRADE, WHEN LOWEST EDGE OF WINDOW OPENING IS WITHIN 24" OF FINISHED FLOOR OF THE ROOM IN WHICH THE WINDOW IS LOCATED.

SMOKE ALARM:

THE FOLLOWING RULES APPLY FOR SMOKE ALARMS (IRC R314).

- YOU MUST INSTALL SMOKE ALARMS IN NEW CONSTRUCTION AND EXISTING DWELLING UNITS.
- THE ALARMS MUST BE POWERED BY INTERCONNECTED BUILDING WIRING, AND HAVE BATTERY BACK–UP IN NEW CONSTRUCTION AND NEW ADDITIONS.
- SMOKE ALARMS MAY BE BATTERY–POWERED IF YOU ARE ALTERING OR REPAIRING A DWELLING UNIT, EXCEPT WHEN YOU CAN INSTALL INTERCONNECTED BUILDING WIRING WITHOUT REMOVING THE INTERIOR FINISHES.
- ALARMS ARE REQUIRED IN SLEEPING ROOMS, OUTSIDE SLEEPINGAREAS, AND ON OTHER FLOORS (INCLUDING BASEMENTS). AN ALARM OUTSIDE OF THE BEDROOMS MUST BE CLEARLY AUDIBLE IN THE BEDROOMS. SHOW THE ALARM LOCATION ON YOUR PLANS.
- HEAT ALARM: A HEAT DETECTOR OR HEAT ALARM RATED FOR AMBIENT OUTDOOR TEMPERATURES AND HUMIDITY IS REQUIREDFOR NEW GARAGES ATTACHED TO OR LOCATED UNDER NEW OR EXISTING DWELLINGS.

CARBON MONOXIDE ALARM:

INSTALL CARBON MONOXIDE ALARMS ACCORDING TO THESE REQUIREMENTS (SEE IRC R315)

- YOU MUST INSTALL CARBON MONOXIDE ALARMS IN NEW CONSTRUCTION AND IN EXISTING DWELLING UNITS.
- CARBON MONOXIDE ALARMS ARE REQUIRED OUTSIDE SLEEPINGAREAS, AND ON ALL FLOORS (INCLUDING BASEMENTS). SHOW THE ALARM LOCATION(S) ON YOUR PLANS

CONSTRUCTION
AND REMODELING

TAM CEM - RESIDENCE

Addition & Alteration
4215 Holly Ln, Mercer Island, WA 98040

Permit Set

Job # 24-028

Description	Date
Permit Intake	10/07/24
1 Correction 01	02/04/25
2 Correction 02	03/06/25

Permit No.: 2407-213

Drawn:
Stamp/Approval:

Sheet Name:

CODE NOTES

Sheet No:

T6.0

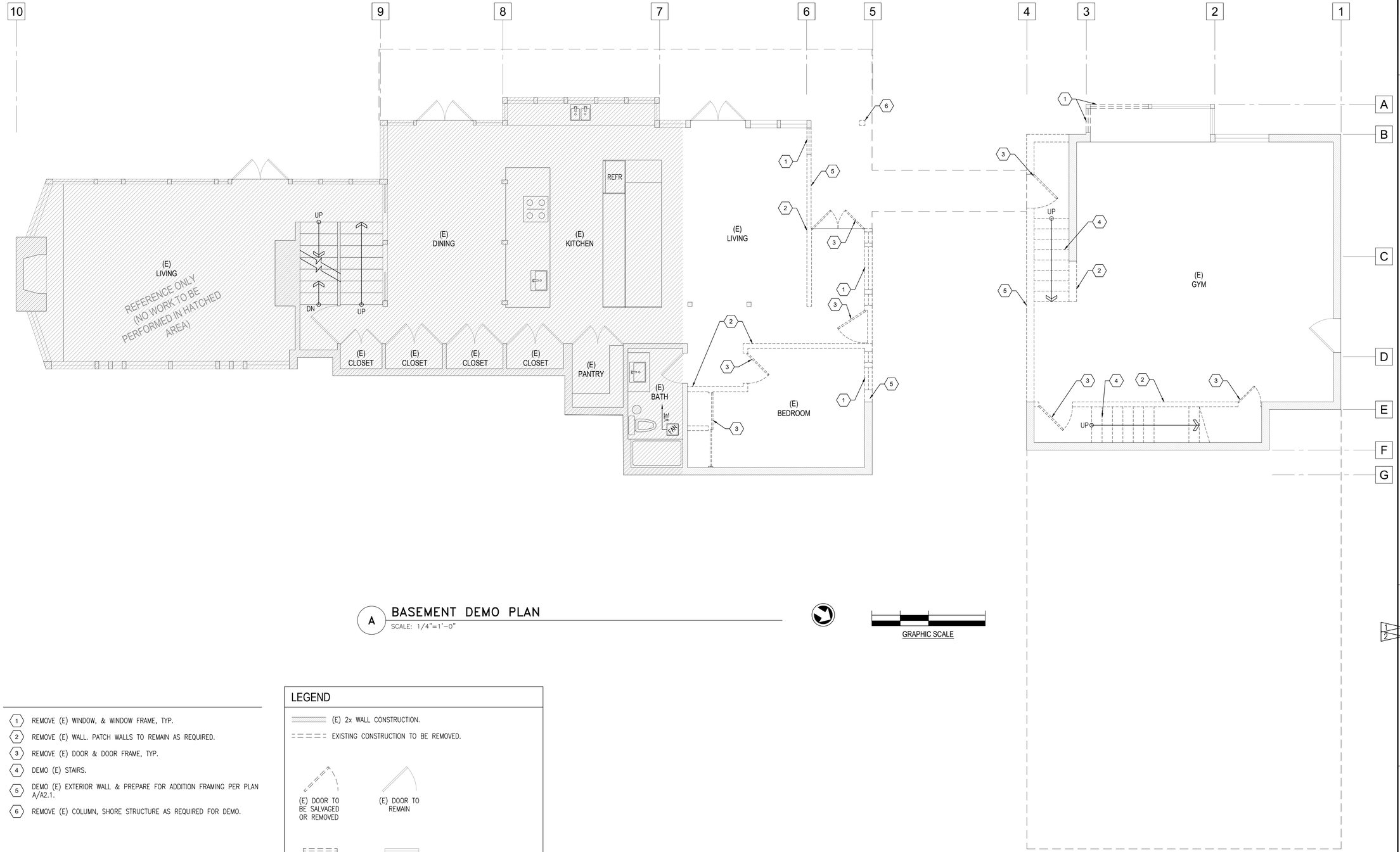

A BASEMENT DEMO PLAN

SCALE: 1/4"=1'-0"

GRAPHIC SCALE

1. REMOVE (E) WINDOW, & WINDOW FRAME, TYP.
2. REMOVE (E) WALL. PATCH WALLS TO REMAIN AS REQUIRED.
3. REMOVE (E) DOOR & DOOR FRAME, TYP.
4. DEMO (E) STAIRS.
5. DEMO (E) EXTERIOR WALL & PREPARE FOR ADDITION FRAMING PER PLAN A/A2.1.
6. REMOVE (E) COLUMN, SHORE STRUCTURE AS REQUIRED FOR DEMO.

LEGEND

(E) 2x WALL CONSTRUCTION.

EXISTING CONSTRUCTION TO BE REMOVED.

(E) DOOR TO BE SALVAGED OR REMOVED

(E) DOOR TO REMAIN

(E) WINDOW TO BE SALVAGED OR REMOVED

(E) WINDOW TO REMAIN

(E) INDICATES EXISTING FIXTURE

CONSTRUCTION
AND REMODELING

TAM CEM - RESIDENCE

Addition & Alteration
4215 Holly Ln, Mercer Island, WA 98040

Permit Set

Job # 24-028

Description	Date
Permit Intake	10/07/24
1 Correction 01	02/04/25
2 Correction 02	03/06/25

Permit No.: 2407-213

Drawn:
Stamp/Approval:

Sheet Name:

BASEMENT DEMO PLAN

Sheet No:

A1.1

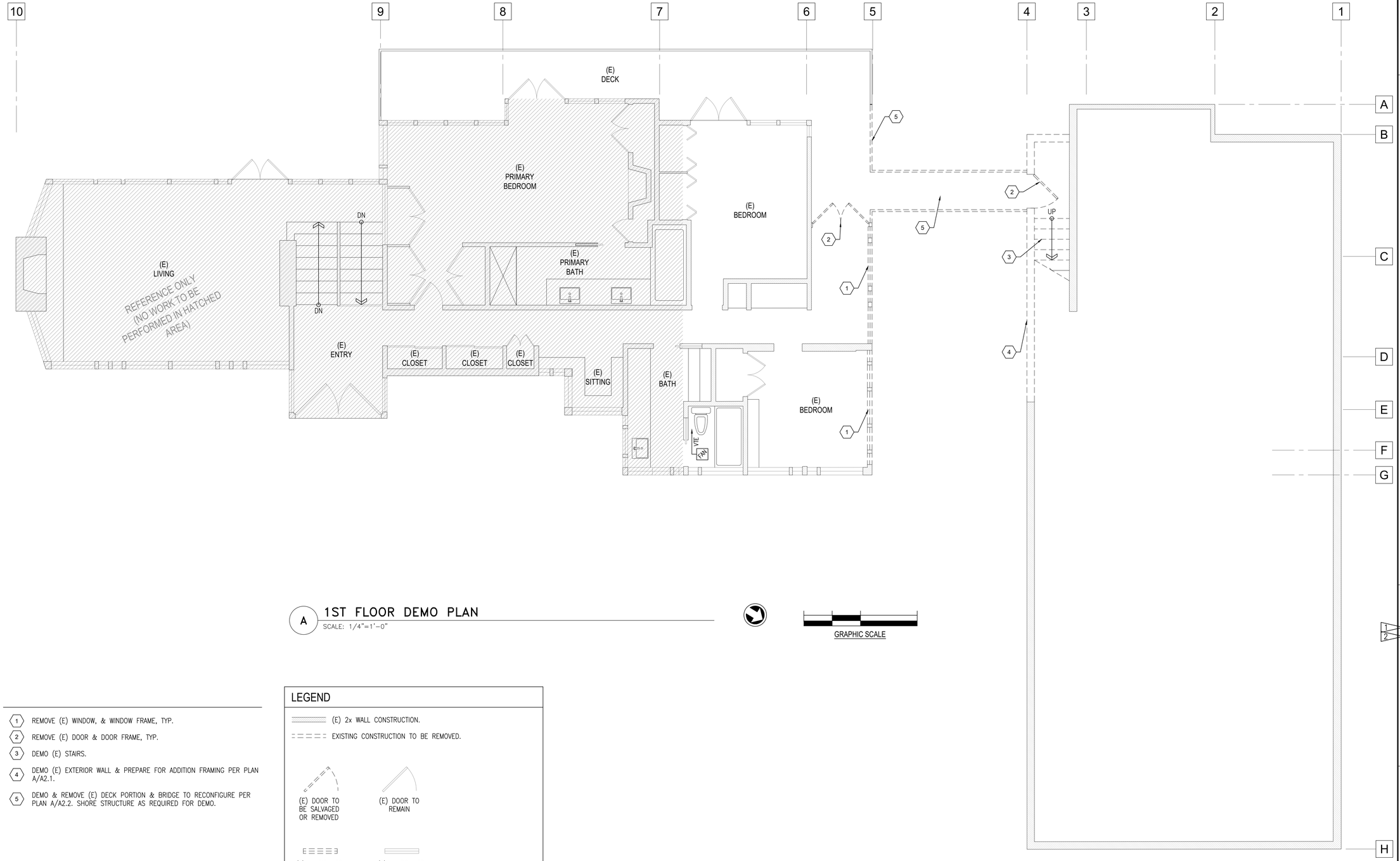

A 1ST FLOOR DEMO PLAN

SCALE: 1/4"=1'-0"

GRAPHIC SCALE

1. REMOVE (E) WINDOW, & WINDOW FRAME, TYP.
2. REMOVE (E) DOOR & DOOR FRAME, TYP.
3. DEMO (E) STAIRS.
4. DEMO (E) EXTERIOR WALL & PREPARE FOR ADDITION FRAMING PER PLAN A/A2.1.
5. DEMO & REMOVE (E) DECK PORTION & BRIDGE TO RECONFIGURE PER PLAN A/A2.2. SHORE STRUCTURE AS REQUIRED FOR DEMO.

LEGEND

(E) 2x WALL CONSTRUCTION.

EXISTING CONSTRUCTION TO BE REMOVED.

(E) DOOR TO BE SALVAGED OR REMOVED

(E) DOOR TO REMAIN

(E) WINDOW TO BE SALVAGED OR REMOVED

(E) WINDOW TO REMAIN

(E) INDICATES EXISTING FIXTURE

CONSTRUCTION AND REMODELING

TAM CEM - RESIDENCE

Addition & Alteration

4215 Holly Ln, Mercer Island, WA 98040

Permit Set

Job # 24-028

Description	Date
Permit Intake	10/07/24
1 Correction 01	02/04/25
2 Correction 02	03/06/25

Permit No.: 2407-213

Drawn:

Stamp/Approval:

Sheet Name:

1ST FLOOR DEMO PLAN

Sheet No:

A1.2

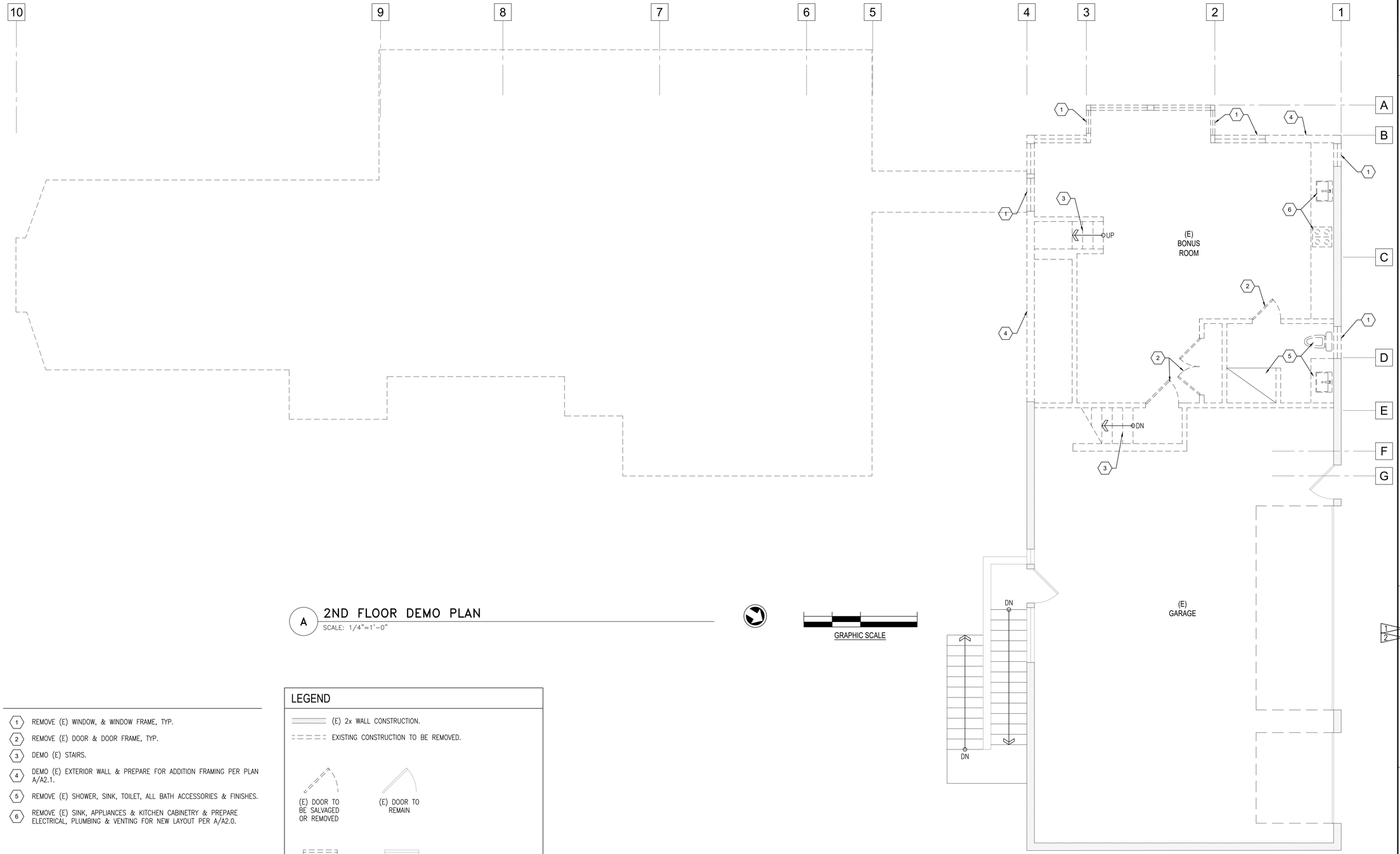

A 2ND FLOOR DEMO PLAN

SCALE: 1/4"=1'-0"

GRAPHIC SCALE

1. REMOVE (E) WINDOW, & WINDOW FRAME, TYP.
2. REMOVE (E) DOOR & DOOR FRAME, TYP.
3. DEMO (E) STAIRS.
4. DEMO (E) EXTERIOR WALL & PREPARE FOR ADDITION FRAMING PER PLAN A/A2.1.
5. REMOVE (E) SHOWER, SINK, TOILET, ALL BATH ACCESSORIES & FINISHES.
6. REMOVE (E) SINK, APPLIANCES & KITCHEN CABINETRY & PREPARE ELECTRICAL, PLUMBING & VENTING FOR NEW LAYOUT PER A/A2.0.

LEGEND

(E) 2x WALL CONSTRUCTION.

EXISTING CONSTRUCTION TO BE REMOVED.

(E) DOOR TO BE SALVAGED OR REMOVED

(E) DOOR TO REMAIN

(E) WINDOW TO BE SALVAGED OR REMOVED

(E) WINDOW TO REMAIN

(E) INDICATES EXISTING FIXTURE

CONSTRUCTION
AND REMODELING

TAM CEM - RESIDENCE

Addition & Alteration
4215 Holly Ln, Mercer Island, WA 98040

Permit Set

Job # 24-028

	Description	Date
	Permit Intake	10/07/24
1	Correction 01	02/04/25
2	Correction 02	03/06/25

Permit No.: 2407-213

Drawn:
Stamp/Approval:

Sheet Name:

2ND FLOOR DEMO PLAN

Sheet No:

A1.3

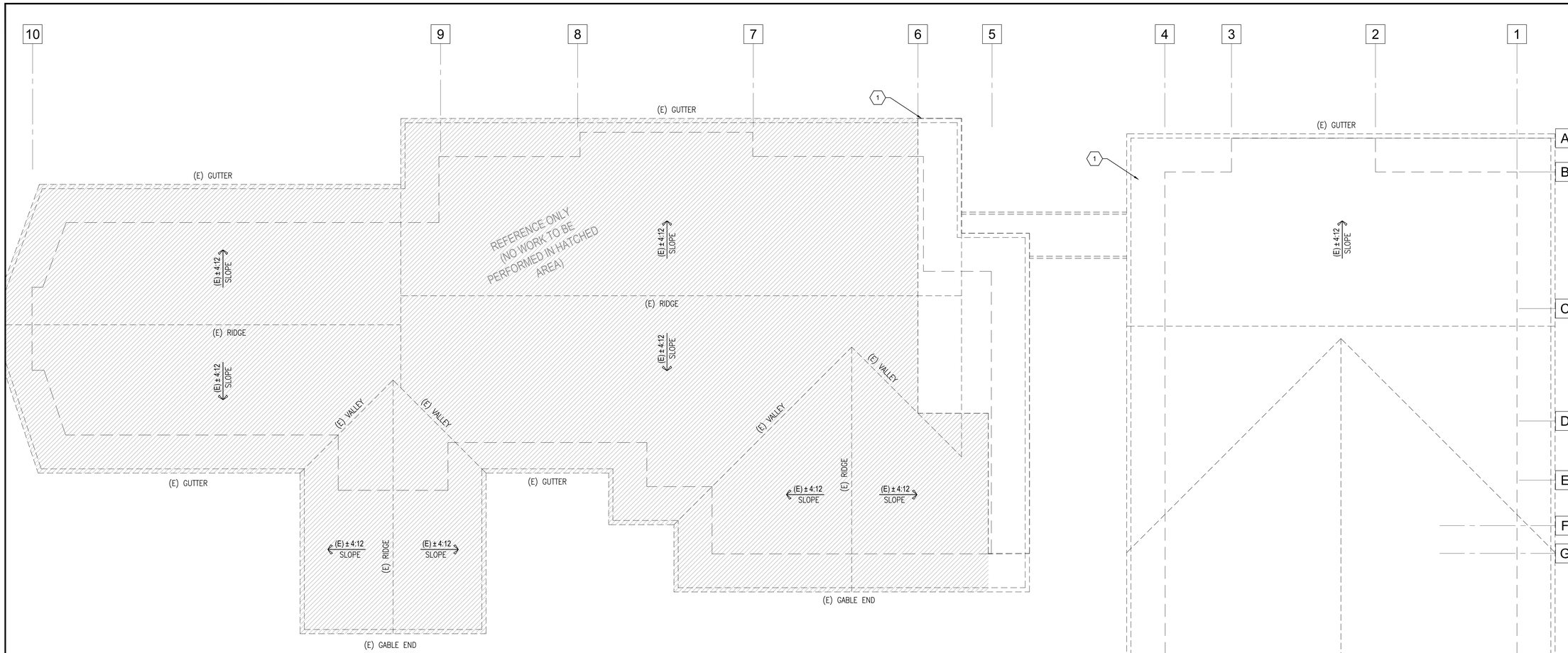

A ROOF DEMO PLAN

SCALE: 1/4"=1'-0"

GRAPHIC SCALE

1 DEMO (E) ROOF PORTION.

LEGEND

(E) 2x WALL CONSTRUCTION.

EXISTING CONSTRUCTION TO BE REMOVED.

(E) DOOR TO BE SALVAGED OR REMOVED

(E) DOOR TO REMAIN

(E) WINDOW TO BE SALVAGED OR REMOVED

(E) WINDOW TO REMAIN

(E) INDICATES EXISTING FIXTURE

CONSTRUCTION AND REMODELING

TAM CEM - RESIDENCE

Addition & Alteration

4215 Holly Ln, Mercer Island, WA 98040

Permit Set

Job # 24-028

	Description	Date
	Permit Intake	10/07/24
1	Correction 01	02/04/25
2	Correction 02	03/06/25

Permit No.: 2407-213

Drawn:

Stamp/Approval:

Sheet Name:

ROOF DEMO PLAN

Sheet No:

A1.4

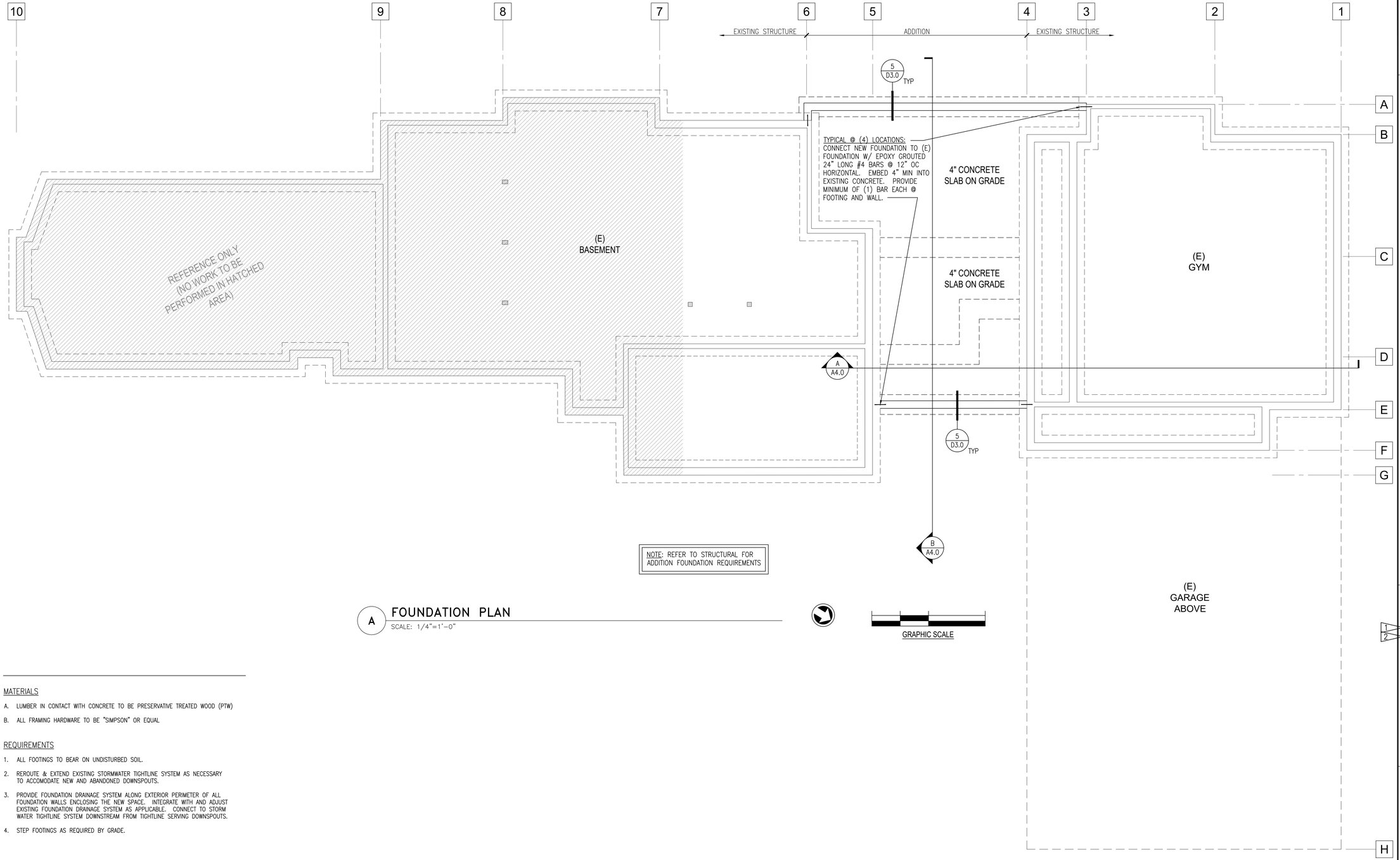

NOTE: REFER TO STRUCTURAL FOR ADDITION FOUNDATION REQUIREMENTS

A FOUNDATION PLAN
SCALE: 1/4"=1'-0"

GRAPHIC SCALE

MATERIALS

A. LUMBER IN CONTACT WITH CONCRETE TO BE PRESERVATIVE TREATED WOOD (PTW)

B. ALL FRAMING HARDWARE TO BE "SIMPSON" OR EQUAL

REQUIREMENTS

1. ALL FOOTINGS TO BEAR ON UNDISTURBED SOIL.
2. REROUTE & EXTEND EXISTING STORMWATER TIGHTLINE SYSTEM AS NECESSARY TO ACCOMODATE NEW AND ABANDONED DOWNSPOUTS.
3. PROVIDE FOUNDATION DRAINAGE SYSTEM ALONG EXTERIOR PERIMETER OF ALL FOUNDATION WALLS ENCLOSING THE NEW SPACE. INTEGRATE WITH AND ADJUST EXISTING FOUNDATION DRAINAGE SYSTEM AS APPLICABLE. CONNECT TO STORM WATER TIGHTLINE SYSTEM DOWNSTREAM FROM TIGHTLINE SERVING DOWNSPOUTS.
4. STEP FOOTINGS AS REQUIRED BY GRADE.

CONSTRUCTION AND REMODELING

TAM CEM - RESIDENCE

Addition & Alteration
4215 Holly Ln, Mercer Island, WA 98040

Permit Set

Job # 24-028

Description	Date
Permit Intake	10/07/24
1 Correction 01	02/04/25
2 Correction 02	03/06/25

Permit No.: 2407-213

Drawn:
Stamp/Approval:

Sheet Name:

FOUNDATION PLAN

Sheet No:

A2.0

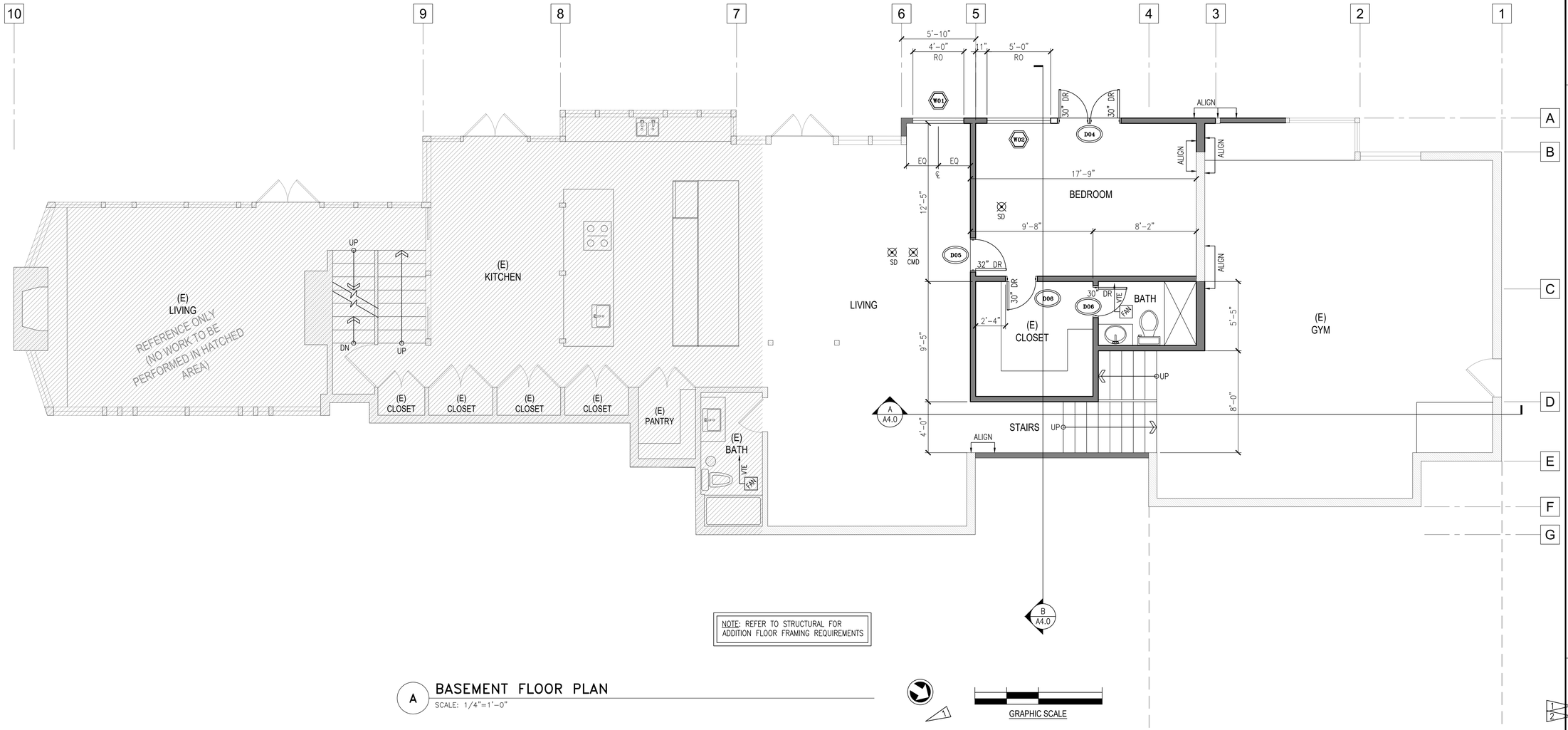

NOTE: REFER TO STRUCTURAL FOR ADDITION FLOOR FRAMING REQUIREMENTS

A BASEMENT FLOOR PLAN

SCALE: 1/4"=1'-0"

1

GRAPHIC SCALE

LEGEND

(E) 2x WALL CONSTRUCTION.

2x6 EXTERIOR WALL CONSTRUCTION (W/ R-21 INSULATION).

2x4 INTERIOR WALL CONSTRUCTION.

(E) 2x WALL CONSTRUCTION. FIELD VERIFY THICKNESS AND ADDED FURRING TO MEETING R-21 INSULATION VALUE.

INFILL WALL TO MATCH EXISTING ASSEMBLY.

DOOR SIZE — 30" DR — NEW OR RELOCATED DOOR

DOOR NUMBER — D03 — SEE DOOR SCHEDULE.

(E) DOOR TO REMAIN

NOTE: DOOR TO MATCH EXISTING UNO

NEW — NEW OR RELOCATED WINDOW

WINDOW NUMBER — W01 — SEE WINDOW SCHEDULE.

(E) WINDOW TO REMAIN

SD — SMOKE DETECTOR (IRC – SECTION R314)

NOTE: REFER TO SECTION R314.3 FOR LOCATIONS AND R314.4 FOR INTERCONNECTION REQUIREMENTS. ALARMS TO BE HARDWIRED EXCEPT WHEN INSTALLED IN ACCORDANCE WITH SECTION R314.2.2 SHALL BE PERMITTED TO BE BATTERY POWERED. PHYSICAL INTERCONNECTION OF SMOKE ALARMS SHALL NOT BE REQUIRED WHERE LISTED WIRELESS ALARMS ARE INSTALLED AND ALL ALARMS SOUND UPON ACTIVATION OF ONE ALARM.

CMD — CARBON MONOXIDE DETECTOR (IRC – SECTION R315)

NOTE: PER R314.5 COMBINATION ALARMS. COMBINATION SMOKE AND CARBON MONOXIDE ALARMS SHALL BE PERMITTED TO BE USED IN LIEU OF SMOKE ALARMS

VTE — EXHAUST FANS:

BATHROOM AND LAUNDRY TO BE MIN. 50 CFM WITH DIRECT VENT TO EXTERIOR (VTE).

403.4.7.3 LOCAL INTERMITTENT KITCHEN EXHAUST SYSTEM. KITCHEN RANGE HOODS FOR DOMESTIC COOKING APPLIANCES SHALL MEET OR EXCEED EITHER THE MINIMUM AIRFLOW OR THE MINIMUM CAPTURE EFFICIENCY IN ACCORDANCE WITH TABLE 403.4.7.3. CAPTURE EFFICIENCY RATINGS SHALL BE DETERMINED IN ACCORDANCE WITH ASTM E3087.

EXCEPTION: OTHER INTERMITTENT KITCHEN EXHAUST FANS, INCLUDING DOWNDRAFT, SHALL MEET OR EXCEED 300 CFM AIRFLOW.

TABLE 403.4.7.3
KITCHEN RANGE HOOD AIRFLOW RATES (CFM) AND ASTM E3087 CAPTURE EFFICIENCY (CE) RATINGS ACCORDING TO KITCHEN RANGE FUEL TYPE

HOOD OVER ELECTRIC RANGE	HOOD OVER COMBUSTION RANGE
65 PERCENT CE OR 160 CFM	80 PERCENT CE OR 250 CFM

(E) INDICATES EXISTING FIXTURE

CONSTRUCTION AND REMODELING

TAM CEM - RESIDENCE

Addition & Alteration
4215 Holly Ln, Mercer Island, WA 98040

Permit Set

Job # 24-028

Description	Date
Permit Intake	10/07/24
1 Correction 01	02/04/25
2 Correction 02	03/06/25

Permit No.: 2407-213

Drawn:
Stamp/Approval:

Sheet Name:

BASEMENT FLOOR PLAN

Sheet No:

A2.1

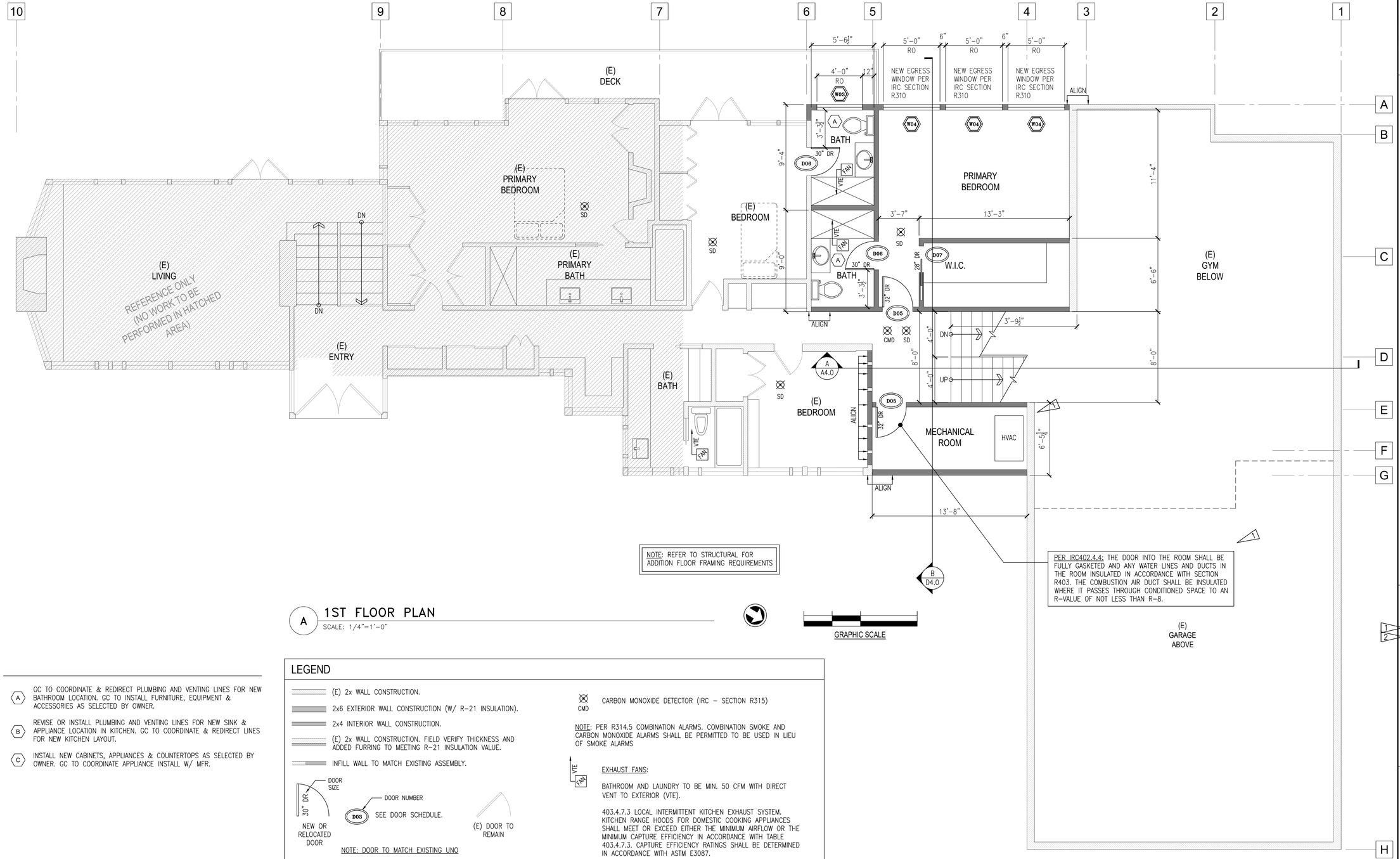

A 1ST FLOOR PLAN

SCALE: 1/4"=1'-0"

GRAPHIC SCALE

A GC TO COORDINATE & REDIRECT PLUMBING AND VENTING LINES FOR NEW BATHROOM LOCATION. GC TO INSTALL FURNITURE, EQUIPMENT & ACCESSORIES AS SELECTED BY OWNER.

B REVISE OR INSTALL PLUMBING AND VENTING LINES FOR NEW SINK & APPLIANCE LOCATION IN KITCHEN. GC TO COORDINATE & REDIRECT LINES FOR NEW KITCHEN LAYOUT.

C INSTALL NEW CABINETS, APPLIANCES & COUNTERTOPS AS SELECTED BY OWNER. GC TO COORDINATE APPLIANCE INSTALL W/ MFR.

LEGEND

(E) 2x WALL CONSTRUCTION.

2x6 EXTERIOR WALL CONSTRUCTION (W/ R-21 INSULATION).

2x4 INTERIOR WALL CONSTRUCTION.

(E) 2x WALL CONSTRUCTION. FIELD VERIFY THICKNESS AND ADDED FURRING TO MEETING R-21 INSULATION VALUE.

INFILL WALL TO MATCH EXISTING ASSEMBLY.

DOOR SIZE — 30" DR — NEW OR RELOCATED DOOR

DOOR NUMBER — D03 — SEE DOOR SCHEDULE.

(E) DOOR TO REMAIN

NOTE: DOOR TO MATCH EXISTING UNO

NEW — NEW OR RELOCATED WINDOW

WINDOW NUMBER — W01 — SEE WINDOW SCHEDULE.

(E) WINDOW TO REMAIN

SD — SMOKE DETECTOR (IRC – SECTION R314)

NOTE: REFER TO SECTION R314.3 FOR LOCATIONS AND R314.4 FOR INTERCONNECTION REQUIREMENTS. ALARMS TO BE HARDWIRED EXCEPT WHEN INSTALLED IN ACCORDANCE WITH SECTION R314.2.2 SHALL BE PERMITTED TO BE BATTERY POWERED. PHYSICAL INTERCONNECTION OF SMOKE ALARMS SHALL NOT BE REQUIRED WHERE LISTED WIRELESS ALARMS ARE INSTALLED AND ALL ALARMS SOUND UPON ACTIVATION OF ONE ALARM.

CMD — CARBON MONOXIDE DETECTOR (IRC – SECTION R315)

NOTE: PER R314.5 COMBINATION ALARMS. COMBINATION SMOKE AND CARBON MONOXIDE ALARMS SHALL BE PERMITTED TO BE USED IN LIEU OF SMOKE ALARMS

VTE — EXHAUST FANS:

BATHROOM AND LAUNDRY TO BE MIN. 50 CFM WITH DIRECT VENT TO EXTERIOR (VTE).

403.4.7.3 LOCAL INTERMITTENT KITCHEN EXHAUST SYSTEM. KITCHEN RANGE HOODS FOR DOMESTIC COOKING APPLIANCES SHALL MEET OR EXCEED EITHER THE MINIMUM AIRFLOW OR THE MINIMUM CAPTURE EFFICIENCY IN ACCORDANCE WITH TABLE 403.4.7.3. CAPTURE EFFICIENCY RATINGS SHALL BE DETERMINED IN ACCORDANCE WITH ASTM E3087.

EXCEPTION: OTHER INTERMITTENT KITCHEN EXHAUST FANS, INCLUDING DOWNDRAFT, SHALL MEET OR EXCEED 300 CFM AIRFLOW.

TABLE 403.4.7.3
KITCHEN RANGE HOOD AIRFLOW RATES (CFM) AND ASTM E3087 CAPTURE EFFICIENCY (CE) RATINGS ACCORDING TO KITCHEN RANGE FUEL TYPE

HOOD OVER ELECTRIC RANGE	HOOD OVER COMBUSTION RANGE
65 PERCENT CE OR 160 CFM	80 PERCENT CE OR 250 CFM

(E) INDICATES EXISTING FIXTURE

CONSTRUCTION AND REMODELING

TAM CEM - RESIDENCE

Addition & Alteration
4215 Holly Ln, Mercer Island, WA 98040

Permit Set

Job # 24-028

Description	Date
Permit Intake	10/07/24
1 Correction 01	02/04/25
2 Correction 02	03/06/25

Permit No.: 2407-213

Drawn:
Stamp/Approval:

Sheet Name:

1ST FLOOR PLAN

Sheet No:

A2.2

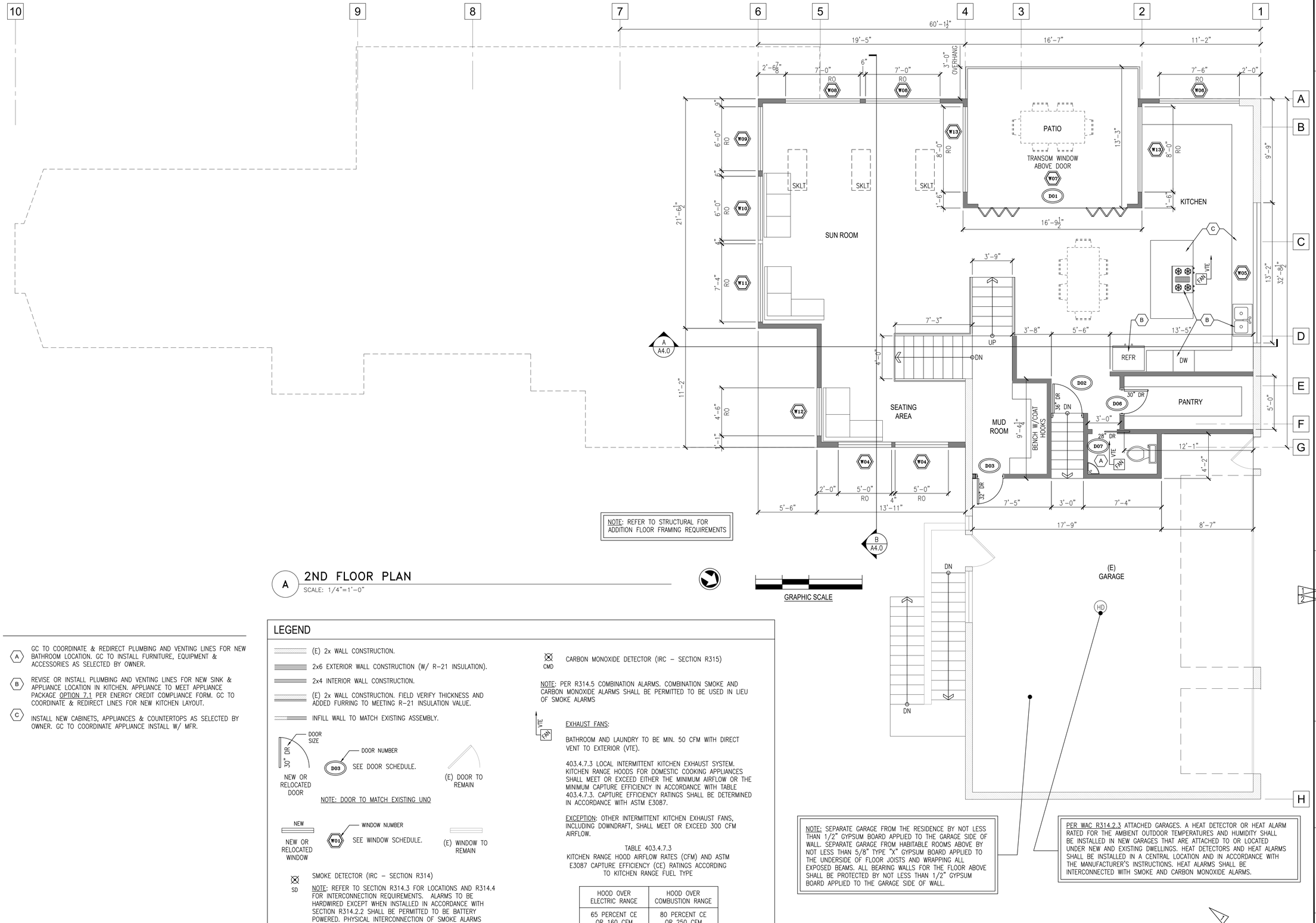

NOTE: REFER TO STRUCTURAL FOR ADDITION FLOOR FRAMING REQUIREMENTS

NOTE: SEPARATE GARAGE FROM THE RESIDENCE BY NOT LESS THAN 1/2" GYPSUM BOARD APPLIED TO THE GARAGE SIDE OF WALL. SEPARATE GARAGE FROM HABITABLE ROOMS ABOVE BY NOT LESS THAN 5/8" TYPE "X" GYPSUM BOARD APPLIED TO THE UNDERSIDE OF FLOOR JOISTS AND WRAPPING ALL EXPOSED BEAMS. ALL BEARING WALLS FOR THE FLOOR ABOVE SHALL BE PROTECTED BY NOT LESS THAN 1/2" GYPSUM BOARD APPLIED TO THE GARAGE SIDE OF WALL.

PER WAC R314.2.3 ATTACHED GARAGES. A HEAT DETECTOR OR HEAT ALARM RATED FOR THE AMBIENT OUTDOOR TEMPERATURES AND HUMIDITY SHALL BE INSTALLED IN NEW GARAGES THAT ARE ATTACHED TO OR LOCATED UNDER NEW AND EXISTING DWELLINGS. HEAT DETECTORS AND HEAT ALARMS SHALL BE INSTALLED IN A CENTRAL LOCATION AND IN ACCORDANCE WITH THE MANUFACTURER'S INSTRUCTIONS. HEAT ALARMS SHALL BE INTERCONNECTED WITH SMOKE AND CARBON MONOXIDE ALARMS.

A 2ND FLOOR PLAN

SCALE: 1/4"=1'-0"

- (A) GC TO COORDINATE & REDIRECT PLUMBING AND VENTING LINES FOR NEW BATHROOM LOCATION. GC TO INSTALL FURNITURE, EQUIPMENT & ACCESSORIES AS SELECTED BY OWNER.
- (B) REVISE OR INSTALL PLUMBING AND VENTING LINES FOR NEW SINK & APPLIANCE LOCATION IN KITCHEN. APPLIANCE TO MEET APPLIANCE PACKAGE OPTION 7.1 PER ENERGY CREDIT COMPLIANCE FORM. GC TO COORDINATE & REDIRECT LINES FOR NEW KITCHEN LAYOUT.
- (C) INSTALL NEW CABINETS, APPLIANCES & COUNTERTOPS AS SELECTED BY OWNER. GC TO COORDINATE APPLIANCE INSTALL W/ MFR.

LEGEND

- (E) 2x WALL CONSTRUCTION.
- 2x6 EXTERIOR WALL CONSTRUCTION (W/ R-21 INSULATION).
- 2x4 INTERIOR WALL CONSTRUCTION.
- (E) 2x WALL CONSTRUCTION. FIELD VERIFY THICKNESS AND ADDED FURRING TO MEETING R-21 INSULATION VALUE.
- INFILL WALL TO MATCH EXISTING ASSEMBLY.

DOOR SIZE — 30" DR — NEW OR RELOCATED DOOR

DOOR NUMBER — D03 — SEE DOOR SCHEDULE.

(E) DOOR TO REMAIN

NOTE: DOOR TO MATCH EXISTING UNO

NEW — NEW OR RELOCATED WINDOW

WINDOW NUMBER — W01 — SEE WINDOW SCHEDULE.

(E) WINDOW TO REMAIN

SD — SMOKE DETECTOR (IRC – SECTION R314)

NOTE: REFER TO SECTION R314.3 FOR LOCATIONS AND R314.4 FOR INTERCONNECTION REQUIREMENTS. ALARMS TO BE HARDWIRED EXCEPT WHEN INSTALLED IN ACCORDANCE WITH SECTION R314.2.2 SHALL BE PERMITTED TO BE BATTERY POWERED. PHYSICAL INTERCONNECTION OF SMOKE ALARMS SHALL NOT BE REQUIRED WHERE LISTED WIRELESS ALARMS ARE INSTALLED AND ALL ALARMS SOUND UPON ACTIVATION OF ONE ALARM.

CMD — CARBON MONOXIDE DETECTOR (IRC – SECTION R315)

NOTE: PER R314.5 COMBINATION ALARMS. COMBINATION SMOKE AND CARBON MONOXIDE ALARMS SHALL BE PERMITTED TO BE USED IN LIEU OF SMOKE ALARMS

VTE — EXHAUST FANS:

BATHROOM AND LAUNDRY TO BE MIN. 50 CFM WITH DIRECT VENT TO EXTERIOR (VTE).

403.4.7.3 LOCAL INTERMITTENT KITCHEN EXHAUST SYSTEM. KITCHEN RANGE HOODS FOR DOMESTIC COOKING APPLIANCES SHALL MEET OR EXCEED EITHER THE MINIMUM AIRFLOW OR THE MINIMUM CAPTURE EFFICIENCY IN ACCORDANCE WITH TABLE 403.4.7.3. CAPTURE EFFICIENCY RATINGS SHALL BE DETERMINED IN ACCORDANCE WITH ASTM E3087.

EXCEPTION: OTHER INTERMITTENT KITCHEN EXHAUST FANS, INCLUDING DOWNDRAFT, SHALL MEET OR EXCEED 300 CFM AIRFLOW.

TABLE 403.4.7.3
KITCHEN RANGE HOOD AIRFLOW RATES (CFM) AND ASTM E3087 CAPTURE EFFICIENCY (CE) RATINGS ACCORDING TO KITCHEN RANGE FUEL TYPE

HOOD OVER ELECTRIC RANGE	HOOD OVER COMBUSTION RANGE
65 PERCENT CE OR 160 CFM	80 PERCENT CE OR 250 CFM

(E) INDICATES EXISTING FIXTURE

CONSTRUCTION AND REMODELING

TAM CEM - RESIDENCE

Addition & Alteration
4215 Holly Ln, Mercer Island, WA 98040

Permit Set

Job # 24-028

Description	Date
Permit Intake	10/07/24
1 Correction 01	02/04/25
2 Correction 02	03/06/25

Permit No.: 2407-213

Drawn:
Stamp/Approval:

Sheet Name:

2ND FLOOR PLAN

Sheet No:

A2.3

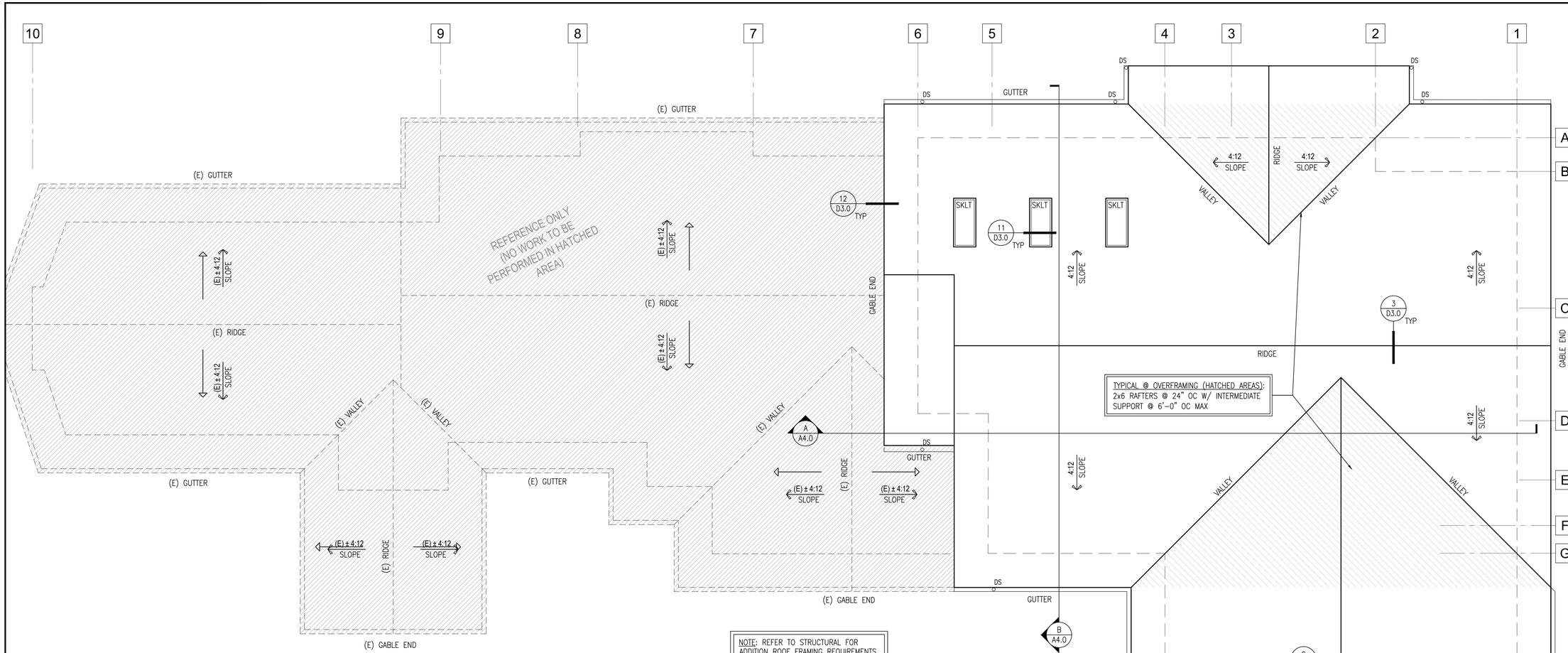

A ROOF PLAN

SCALE: 1/4"=1'-0"

GRAPHIC SCALE

MATERIALS

A. ROOF FRAMING – MEMBER SIZE AND SPACING PER PLAN & DETAILS. WOOD SPECIES AND MECHANICAL PROPERTIES PER STRUCTURAL.

B. ROOF DECKING TO BE 1/2" EXTERIOR GRADE ROOF SHEATHING WITH 32/16 SPAN RATING.

C. ALL FRAMING HARDWARE TO BE "SIMPSON" OR EQUAL.

D. NOTE: FOR THE 2x ENGINEERED ROOF TRUSSES, THE TRUSS MANUFACTURER SHALL SUBMIT TO THE PLANS REVIEWER, SHOP DRAWINGS AND CALCULATIONS STAMPED, SIGNED, AND DATED BY A WASHINGTON STATE LICENSED ENGINEER WHICH MEET ALL THE REQUIREMENTS OF SECTION R802.10. TRUSS PLATES TO BE ICC APPROVED. TOP AND BOTTOM CHORDS SHALL BE D.F. NO. 2 OR BETTER.

REQUIREMENTS

1. R-49 BATT INSULATION @ ALL ATTIC CEILING CONDITIONS.
2. SINGLE PLY ROOFING MEMBRANE:
   - TPO: REFER TO ASTM D6878 STANDARD SPECIFICATION FOR THERMOPLASTIC POLYOLEFIN BASED SHEET ROOFING
   - EPDM: REFER TO ASTM D4637 STANDARD SPECIFICATION FOR EPDM SHEET USED IN SINGLE-PLY ROOF MEMBRANE
   - PVC: REFER ASTM D4434 STANDARD SPECIFICATION FOR POLY(VINYL CHLORIDE) SHEET ROOFING

   (PROVIDE UNDERLAYMENT PER MFR'S REQUIREMENT.)
3. PROVIDE FIREBLOCKING PER SECTION R602.8.

ROOF VENTILATION CALCULATION:
2021 INTERNATIONAL RESIDENTIAL CODE (SECTION R806 ROOF VENTILATION)

R806.2 MINIMUM VENT AREA. USE EXCEPTION 1 & 2: 1/300 S.F.

1) IN CLIMATE ZONES 6, 7 & 8, A CLASS I OR II VAPOR RETARDER IS INSTALLED ON THE WARM-IN-WINTER SIDE OF THE CEILING.
2) NOT LESS THAN 40% AND NOT MORE THAN 50% OF REQUIRED VENTILATION TO BE LOCATED IN UPPER PORTION OF THE ATTIC OR RAFTER SPACE. UPPER VENTS SHALL BE LOCATED NOT MORE THAN 3 FEET BELOW THE RIDGE OR HIGHEST POINT OF SPACE. THE BALANCE OF THE REQUIRED VENTILATION PROVIDED SHALL BE LOCATED IN THE BOTTOM ONE-THIRD OF THE ATTIC SPACE.

R806.2 MINIMUM VENT AREA. USE EXCEPTION 2: 1/300 S.F.

ALL VENT OPENINGS TO BE PROTECTED WITH CORROSION-RESISTANT WIRE MESH PER R806.1.

ROOF AREA A:

TOTAL NET FREE VENTILATING AREA REQUIRED = 2,366.75 SF / 300 = 7.88 SF
REQUIRED AT HIGH & LOW ROOF = 7.88 SF / 2 = 3.94 SF

HIGH ROOF VENTILATION AT RIDGE:
TOTAL LINEAR FEET RIDGE = TOTAL RAFTER BAYS 96'/2' = 48 BAYS
TOTAL NEW RIDGE VENTS PER BAY *0.15 (PER DTL 12/D3.0) = 48 BAY x .15 = 7.2 SF

LOWER ROOF VENTILATION:
TOTAL LINEAR FEET OF LOW EAVE = TOTAL RAFTER BAYS 297'/2' = 148 BAYS
148 RAFTER BAYS *0.065 SF VENTS (DTL 4/D3.0) AREA PER BAY = 9.65 SF

TOTAL NET FREE VENTILATING AREA PROVIDED OKAY = 16.85 SF

CONSTRUCTION AND REMODELING

TAM CEM - RESIDENCE

Addition & Alteration
4215 Holly Ln, Mercer Island, WA 98040

Permit Set

Job # 24-028

Description	Date
Permit Intake	10/07/24
1 Correction 01	02/04/25
2 Correction 02	03/06/25

Permit No.: 2407-213

Drawn:
Stamp/Approval:

Sheet Name:

ROOF PLAN

Sheet No:

A2.4

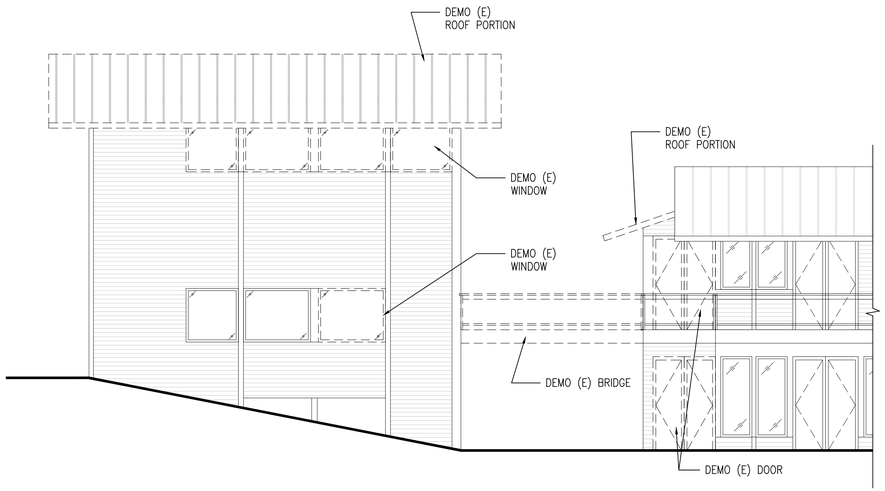

D EXISTING WEST ELEVATION
SCALE: 3/16"=1'-0"

GRAPHIC SCALE

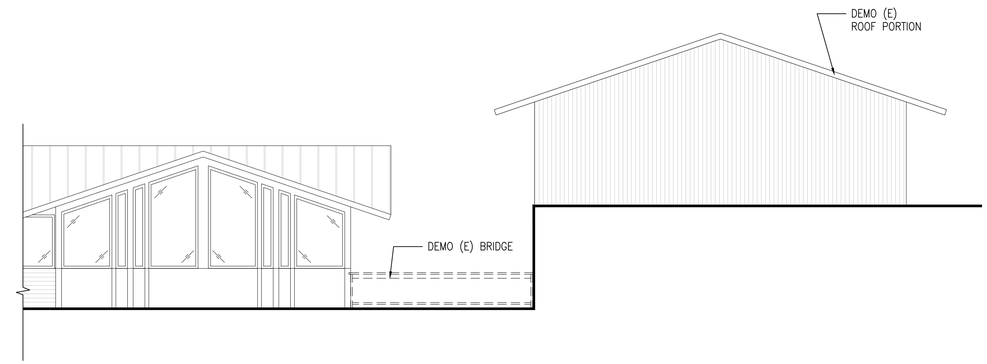

B EXISTING EAST ELEVATION
SCALE: 3/16"=1'-0"

GRAPHIC SCALE

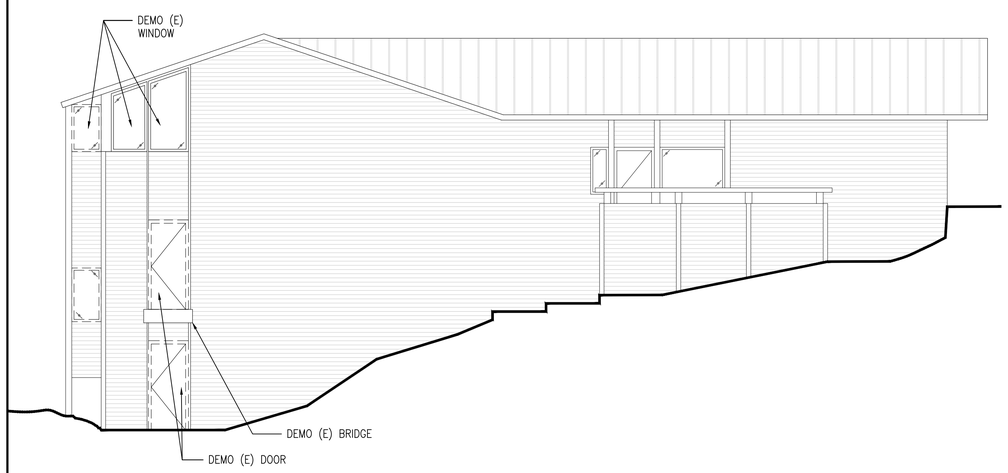

C EXISTING SOUTH ELEVATION
SCALE: 3/16"=1'-0"

GRAPHIC SCALE

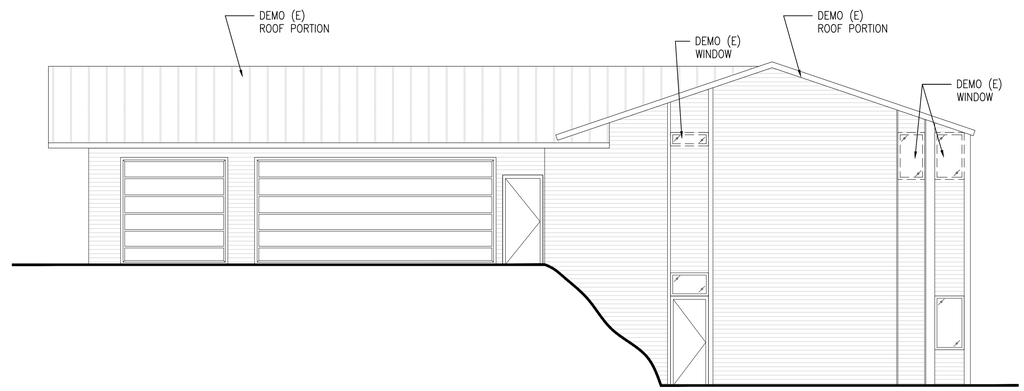

A EXISTING NORTH ELEVATION
SCALE: 3/16"=1'-0"

GRAPHIC SCALE

CONSTRUCTION
AND REMODELING

TAM CEM - RESIDENCE

Addition & Alteration
4215 Holly Ln, Mercer Island, WA 98040

Permit Set

Job # 24-028

	Description	Date
	Permit Intake	10/07/24
1	Correction 01	02/04/25
2	Correction 02	03/06/25

Permit No.: 2407-213

Drawn:
Stamp/Approval:

Sheet Name:

EXISTING ELEVATIONS

Sheet No:

A3.1

D WEST ELEVATION
SCALE: 3/16"=1'-0"

GRAPHIC SCALE

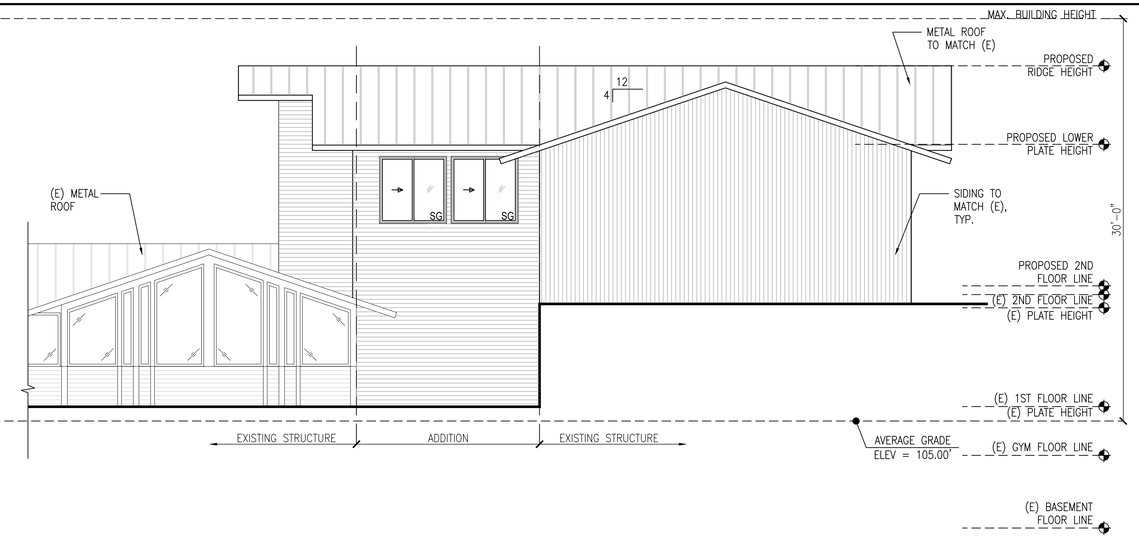

B EAST ELEVATION
SCALE: 3/16"=1'-0"

GRAPHIC SCALE

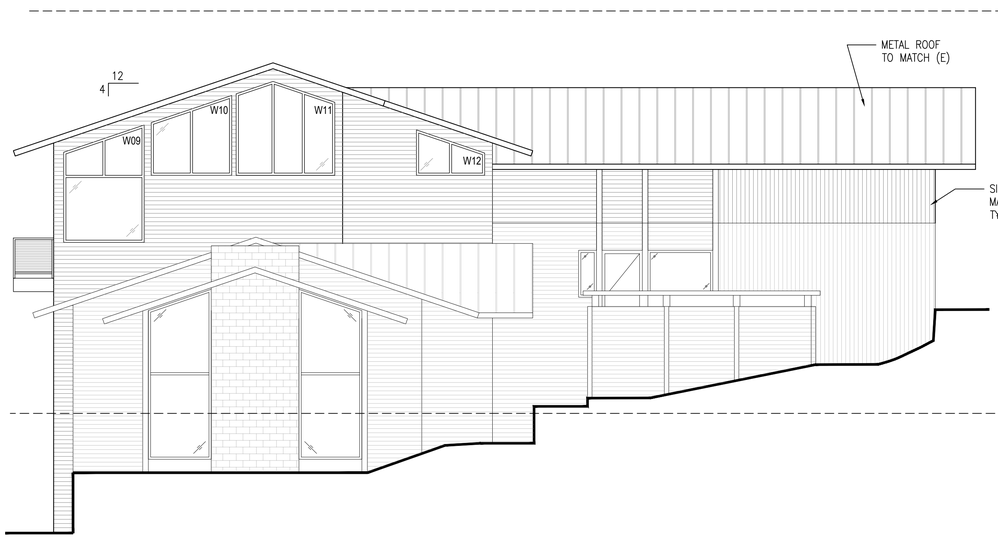

C SOUTH ELEVATION
SCALE: 3/16"=1'-0"

GRAPHIC SCALE

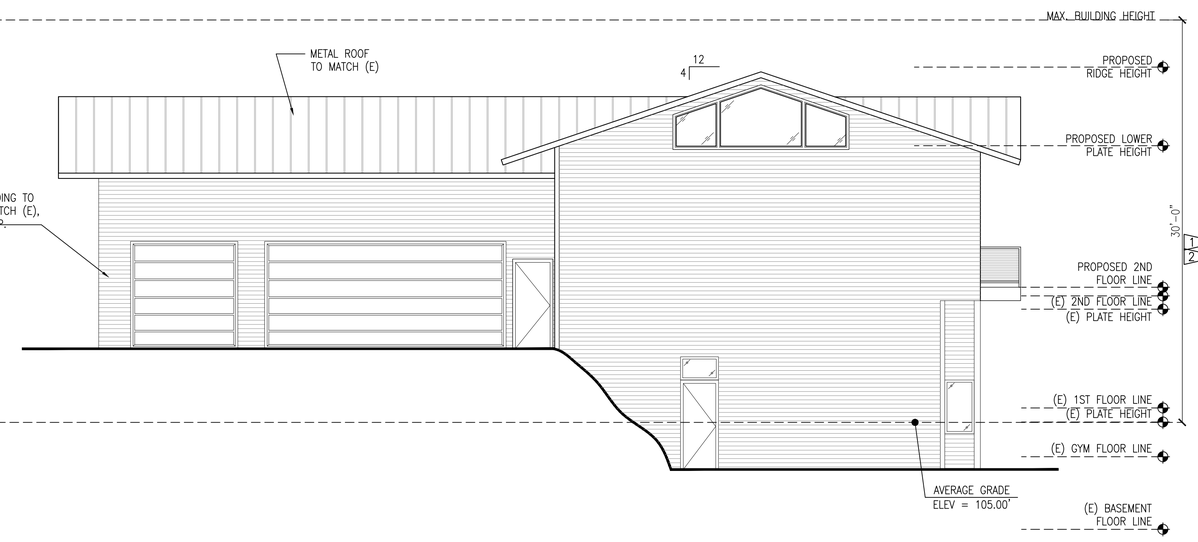

A NORTH ELEVATION
SCALE: 3/16"=1'-0"

GRAPHIC SCALE

CONSTRUCTION
AND REMODELING

TAM CEM - RESIDENCE

Addition & Alteration
4215 Holly Ln, Mercer Island, WA 98040

Permit Set

Job # 24-028

Description	Date
Permit Intake	10/07/24
1 Correction 01	02/04/25
2 Correction 02	03/06/25

Permit No.: 2407-213

Drawn:
Stamp/Approval:

Sheet Name:

ELEVATIONS

Sheet No:

A3.2

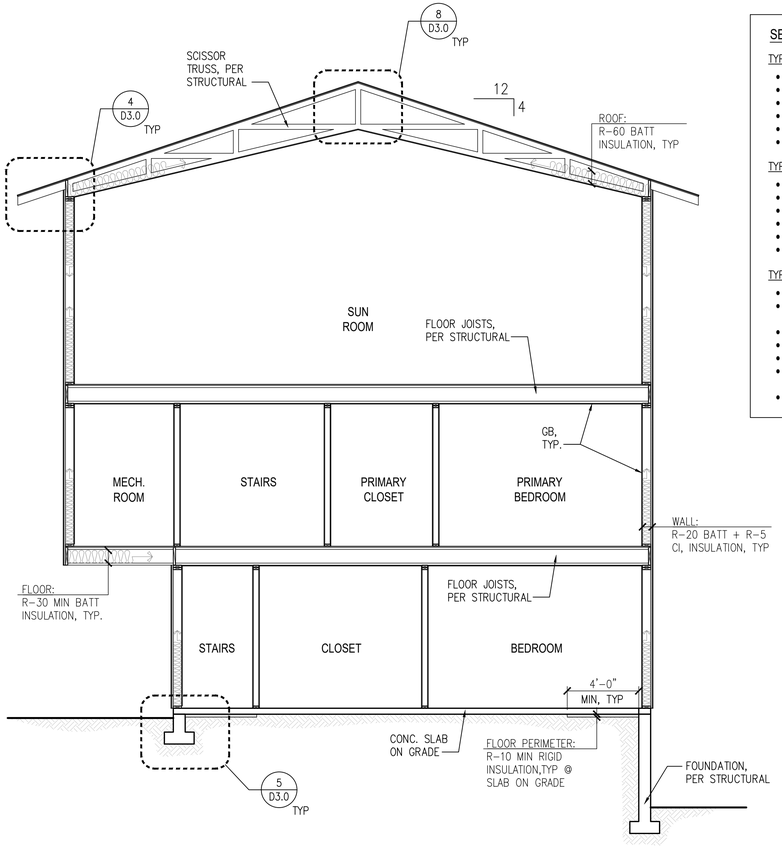

B BUILDING SECTION

SCALE: 1/4"=1'-0"

GRAPHIC SCALE

SECTION NOTES:

TYPICAL ROOF CONSTRUCTION

- METAL ROOF TO MATCH (E).
- (1) LAYER OF UNDERLAYMENT (PER MFR).
- 1/2" EXTERIOR GRADE ROOF SHEATHING.
- ROOF FRAMING PER PLAN.
- R-60 BATT INSULATION AT RAFTERS.
- 5/8" GB.

TYPICAL WALL CONSTRUCTION

- SIDING PER ELEVATIONS.
- WEATHER-RESISTANT BARRIER MEMBRANE.
- 1/2" EXTERIOR GRADE SHEATHING.
- 2x STUDS @ 16" OC (SEE PLAN FOR SIZE).
- R-20 BATT + R-5 CI INSULATION.
- 1/2" GB

TYPICAL FLOOR CONSTRUCTION

- FLOOR FINISHES PER OWNER.
- 3/4" PLYWOOD SUBFLOOR GLUED AND NAILED OVER FLOOR JOISTS.
- FLOOR JOISTS PER STRUCTURAL.
- R-30 BATT INSULATION.
- 4" CONCRETE SLAB ON GRADE.
- R-10 MIN. RIGID INSULATION, 4'-0" MIN. @ PERIMETER.
- VAPOR BARRIER OVER GRADE.

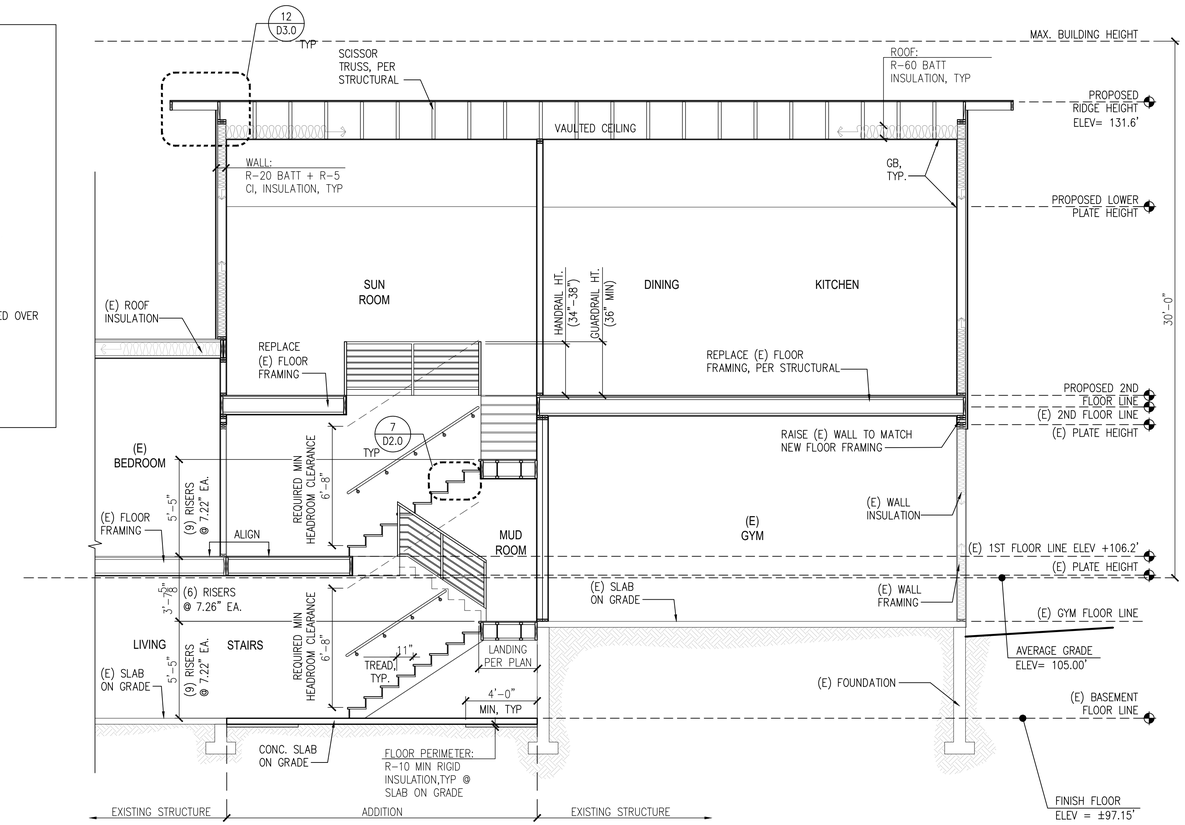

A BUILDING SECTION

SCALE: 1/4"=1'-0"

GRAPHIC SCALE

CONSTRUCTION
AND REMODELING

TAM CEM - RESIDENCE

Addition & Alteration
4215 Holly Ln, Mercer Island, WA 98040

Permit Set

Job # 24-028

Description	Date
Permit Intake	10/07/24
1 Correction 01	02/04/25
2 Correction 02	03/06/25

Permit No.: 2407-213

Drawn:
Stamp/Approval:

Sheet Name:

SECTIONS

Sheet No:

A4.0

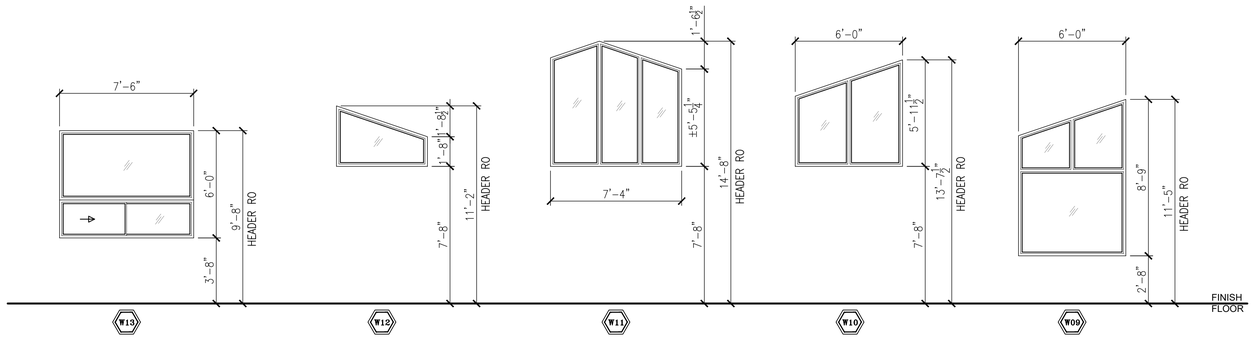

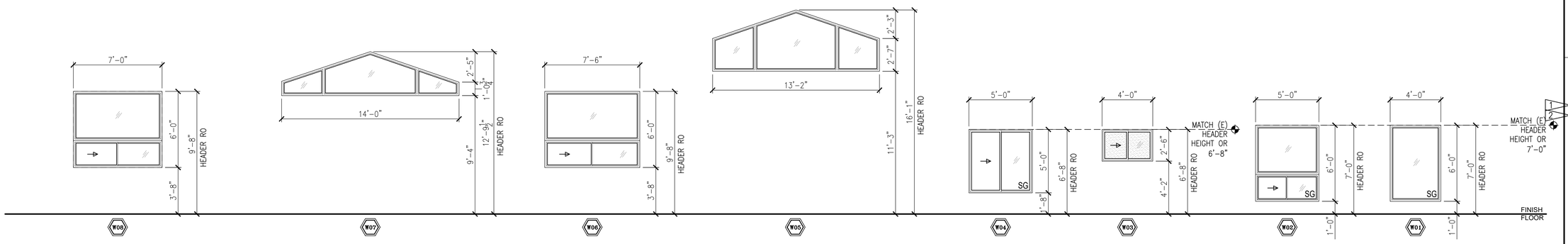

WINDOW SCHEDULE

IDEN	TYPE	MATERIAL	SIZE WIDTH	SIZE HEIGHT	ROUGH OPENING WIDTH	ROUGH OPENING HEIGHT	QUANTITY	TOTAL AREA	SPEC	DESCRIPTION
W01	FIXED	VINYL	4'-0"	6'-0"	PER ELEVATION		1	24.00 SF	(A)	SG REQUIRED
W02	COMBO	VINYL	5'-0"	6'-0"	PER ELEVATION		1	30.00 SF	(A)	COMBO (FIX & SLIDER). SG REQUIRED. SEE ELEVATIONS
W03	SLIDER	VINYL	4'-0"	2'-6"	PER ELEVATION		1	10.00 SF	(A)	PRIVACY GLAZING
W04	SLIDER	VINYL	5'-0"	5'-0"	PER ELEVATION		5	125.00 SF	(A)	SG REQUIRED
W05	TRANSOM FIXED	VINYL	13'-2"	PER ELEV.	PER ELEVATION		1	48.82 SF	(A)	
W06	COMBO	VINYL	7'-6"	6'-0"	PER ELEVATION		1	45.00 SF	(A)	COMBO (FIX & SLIDER). SEE ELEVATIONS
W07	TRANSOM FIXED	VINYL	14'-0"	PER ELEV.	PER ELEVATION		1	31.89 SF	(A)	
W08	COMBO	VINYL	7'-0"	6'-0"	PER ELEVATION		2	84.00 SF	(A)	COMBO (FIX & SLIDER). SEE ELEVATIONS
W09	FIXED	VINYL	6'-0"	PER ELEV.	PER ELEVATION		1	46.40 SF	(A)	
W10	FIXED	VINYL	6'-0"	PER ELEV.	PER ELEVATION		1	29.64 SF	(A)	
W11	FIXED	VINYL	6'-0"	PER ELEV.	PER ELEVATION		1	46.40 SF	(A)	
W12	FIXED	VINYL	4'-6"	PER ELEV.	PER ELEVATION		1	12.82 SF	(A)	
W13	FIXED	VINYL	8'-0"	6'-0"	PER ELEVATION		2	96.00 SF	(A)	
						TOTAL QUANTITY	19	629.97 SF	TOTAL AREA (SQUARE FEET)	

NOTES:
(1)

SPECIFICATION:
(A) ALL VERTICAL FENESTRATION TO HAVE U-FACTOR = 0.30 MAX OR BETTER (PER ENERGY CREDIT OPTION 1.3); NFRC-CERTIFIED

DOOR SCHEDULE (MFR & MODEL OR EQUAL)

IDEN	TYPE	DOOR SIZE WIDTH	DOOR SIZE HEIGHT	ROUGH OPENING WIDTH	ROUGH OPENING HEIGHT	MATERIAL	QUANTITY	TOTAL AREA	U-FACTOR (MIN OR BETTER NFRC-CERTIFIED)	DESCRIPTION
D01	FOLDABLE DOOR	14'-0"	8'-0"	14'-2"	8'-2.5"	FIBERGLASS WOODCLAD	1	129.33	0.30	INSULATED DOOR, FULL RELITE, SG REQUIRED REFER TO ELEVATION FOR DOOR & RELITE CONFIGURATION
D02	SINGLE PANEL	3'-0"	6'-8"	3'-2"	6'-10.5"	FIBERGLASS WOODCLAD	1	19.98	0.30	FIRE RATED, INSULATED & SELF CLOSER
D03	SINGLE PANEL	2'-8"	6'-8"	2'-10"	6'-10.5"	FIBERGLASS WOODCLAD	1	17.77	0.30	FIRE RATED, INSULATED & SELF CLOSER
D04	FRENCH DOORS	5'-0"	7'-0"	5'-2"	7'-2.5"	FIBERGLASS WOODCLAD	1	35.00	0.30	INSULATED
D05	SINGLE PANEL	2'-8"	6'-8"	2'-10"	6'-10.5"	WOOD	3	–	–	–
D06	SINGLE PANEL	2'-6"	6'-8"	2'-8"	6'-10.5"	WOOD	5	–	–	–
D07	POCKET PANEL	2'-4"	6'-8"	2'-8"	8'-2.5"	WOOD	2	–	–	–

NOTES:
1) VERIFY WITH DOOR MFR FOR ACTUAL ROUGH OPENING REQUIREMENTS.

NOTES:
(A) ALL VERTICAL FENESTRATION TO HAVE U-FACTOR = 0.30 OR BETTER (ENERGY CREDIT OPTION 1.3); NFRC-CERTIFIED

CONSTRUCTION
AND REMODELING

TAM CEM - RESIDENCE

Addition & Alteration
4215 Holly Ln, Mercer Island, WA 98040

Permit Set

Job # 24-028

Description	Date
Permit Intake	10/07/24
Correction 01	02/04/25
Correction 02	03/06/25

Permit No.: 2407-213

Drawn:
Stamp/Approval:

Sheet Name:

SCHEDULES

Sheet No:

D1.0

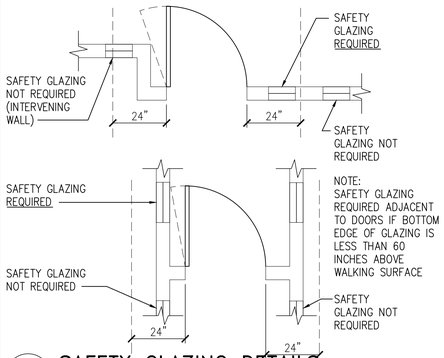

A SAFETY GLAZING DETAILS

SCALE: 3/8"=1'-0"

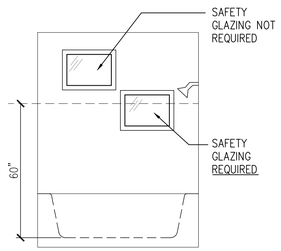

SAFETY GLAZING REQUIREMENTS AT WET SURFACES

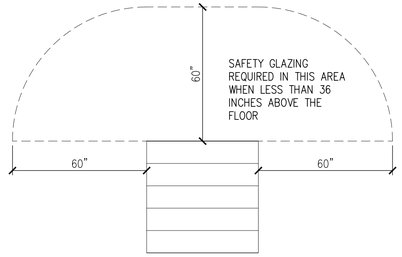

SAFETY GLAZING REQUIREMENTS ADJACENT TO BOTTOM STAIR LANDINGS

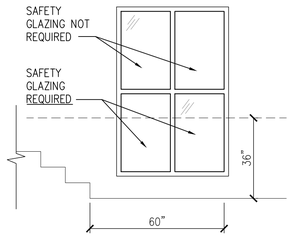

SAFETY GLAZING REQUIREMENTS ADJACENT TO BOTTOM STAIR LANDINGS

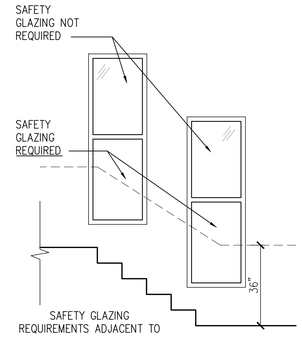

SAFETY GLAZING REQUIREMENTS ADJACENT TO STAIRS & RAMPS

SAFETY GLAZING IN WINDOWS:

REQUIRED IF THE INDIVIDUAL PANEL MEETS ALL THE FOLLOWING REQUIREMENTS:

A. EXPOSED INDIVIDUAL PANEL IS GREATER THAN 9 SQ FT
B. BOTTOM EDGE OF GLAZING IS LESS THAN 18 INCHES FROM FLOOR
C. TOP EDGE OF THE GLAZING IS MORE THAN 36 INCHES ABOVE FLOOR
D. A WALKING SURFACE WITHIN 36 INCHES, MEASURED HORIZONTALLY, FROM THE GLAZING

EXCEPTIONS

I. DECORATIVE GLAZING
II. A HORIZONTAL RAIL CAPABLE OF RESISTING 50 LBS PER LINER FOOT OF FORCE W/OUT MAKING CONTACT WITH THE GLAZING IS INSTALLED ON ACCESSIBLE SIDE OF GLAZING 34 TO 38 INCHES ABOVE THE WALKING SURFACE.

SAFETY GLAZING AT STAIRS & RAILINGS:

1. WHERE HORIZONTAL RAIL CAPABLE OF RESISTING 50 LBS PER LINEAR FOOT OF FORCE W/OUT MAKING CONTACT WITH THE GLAZING IN IS INSTALLED ON THE ACCESSIBLE SIDE OF THE GLAZING 34 TO 38 INCHES ABOVE THE WALKING SURFACE.
2. GLAZING MORE THAN 36 INCHES HORIZONTALLY FROM THE WALKING SURFACE IS NOT REQUIRED TO BE SAFETY GLAZING.

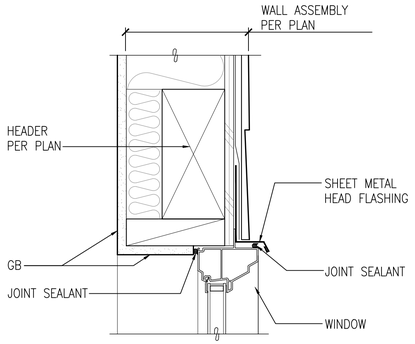

19 HEAD DETAIL

SCALE: 3"=1'-0"

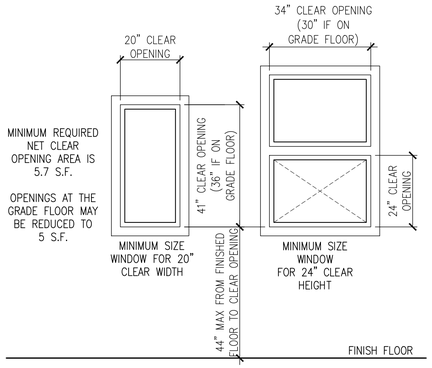

BASEMENTS, HABITABLE ATTICS AND EVERY SLEEPING ROOM SHALL NOT HAVE LESS THAN ONE OPERABLE EMERGENCY ESCAPE AND RESCUE OPENING. WHERE BASEMENTS CONTAIN ONE OR MORE SLEEPING ROOMS, AN EMERGENCY ESCAPE AND RESCUE OPENING SHALL BE REQUIRED IN EACH SLEEPING ROOM. EMERGENCY ESCAPE AND RESCUE OPENINGS SHALL OPEN DIRECTLY INTO A PUBLIC WAY, OR TO A COURT OR YARD THAT OPENS TO A PUBLIC WAY.

15 MINIMUM EMERGENCY EGRESS OPENING REQUIREMENTS

SCALE: 1/2"=1'-0"

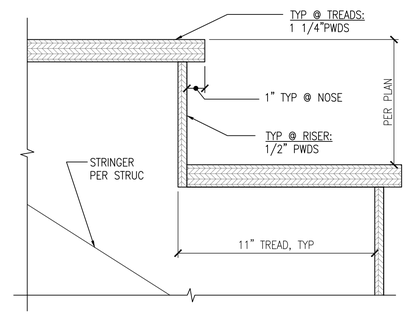

7 TYPICAL INTERIOR TREAD RISER DETAIL

SCALE: NTS

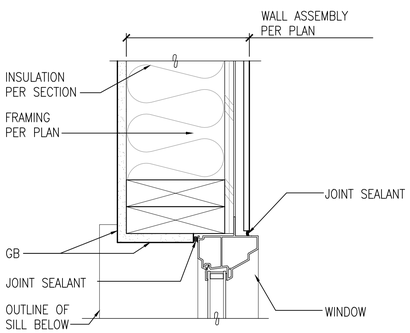

18 JAMB DETAIL

SCALE: 3"=1'-0"

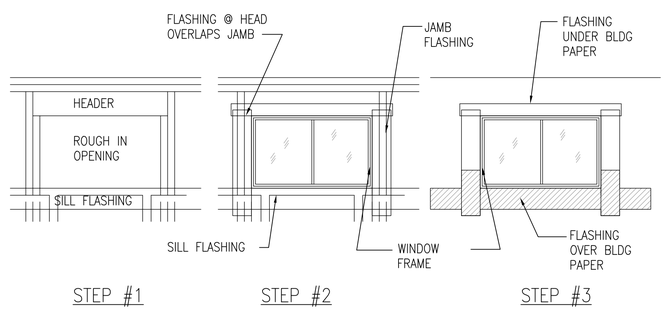

FLASHING OF EXTERIOR WALL OPENINGS:

INDIVIDUALLY FLASH ALL EXTERIOR OPENINGS FOR FIXTURE SUCH AS WINDOWS, DOORS, AND VENTS TO MAKE THEM WATERRPROOF. FLASHING MATERIAL SHALL BE MOISTOP BY MANFUL. SEALANT SHALL BE COMPATIBLE AND APPROVED BY MANFUL. IN HIGH WIND AREAS W.R. GRACE ICE & WATER SHIELD SHALL BE USED, OVER SOLID BACKING. FLASHING MATERIAL AT LEAST 9" WIDE SHALL BE APPLIED IN A WEATHER BOARD FASHION, BEGINNING WITH THE SILL WITH A STRIP LONG ENOUGH TO PROJECT BEYOND THE JAMB FLASHING TO BE APPLIED. THE TWO JAMB FLASHING ARE THEN APPLIED WITH SUFFICIENT LENGTH TO EXTEND BEYOND THE SILL FLASHING, AND WITH THE SAME DISTANCE AT THE TOP.

FOR FIXTURES WITHOUT NAIL-ON FLANGES, THE FLASHING SHALL BE 12" MIN. WIDTH AND EXTEND INTO THE ROUGH FRAME AT THE SILL AND JAMB.

FOR NAIL-ON FLANGE FIXTURE, INSTALL BY PRESSING FLANGE POSITIVELY INTO A CONTINUOUS BEAD OF SEALANT WHICH EXTENDS AROUND THE BOTTOM AND SIDES OF THE FIXTURE.

APPLY THE TOP HORIZONTAL FLASHING LAST, WITH SUFFICIENT LENGTH TO EXTEND BEYOND THE JAMB FLASHING.
OVERLAP AND SEAL AGAINST THE THE TOP NAILING FLANGE OR G.S.M. HEAD FLASHING WITH A CONTINUOUS BEAD OF SEALANT.

APPLY REMAINING WALL SHEATHING PAPER IN A WEATHERBOARD FASHION WITH THE SILL FLASHING LAPPING OVER THE TOP AND THE HEAD AND JAMB FLASHING BELOW.

13 TYPICAL WINDOW OPENING FLASHING REQUIREMENTS

SCALE: NTS

HANDRAIL AND GUARDRAILS SHALL BE CONSTRUCTED AS FOLLOWS:

GUARDRAILS SHALL NOT BE LESS THAN 36" IN HEIGHT. HANDRAILS SHALL NOT BE LESS THAN 34" OR MORE THAN 38" IN HEIGHT ABOVE THE STAIR NOSING.

OPEN RAILS SHALL HAVE INTERMEDIATE RAILS OR AN ORNAMENTAL PATTERN SUCH AS A 4" DIAMETER SPHERE CANNOT PASS THROUGH.

THE TRIANGULAR OPENINGS AT STAIR TREAD, RISER & BOTTOM SHALL BE SUCH AS A 6" DIAMETER SPHERE CANNOT PASS THROUGH.

THE HANDRAIL CONSTRUCTION SHALL BE ABLE TO RESIST A LOAD OF 200 LBS APPLIED IN ANY DIRECTION AT ANY POINT ALONG THE TOP RAIL.

THIS DIAGRAM ILLUSTRATES THE SPECIFIC REQUIREMENTS OF THE BUILDING CODE AND IS ONLY AN AID FOR CONSTRUCTION

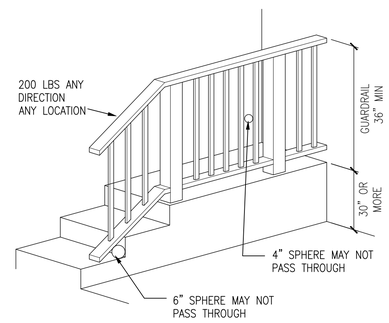

6 TYPICAL HANDRAIL / GUARDRAIL DETAIL

SCALE: NTS

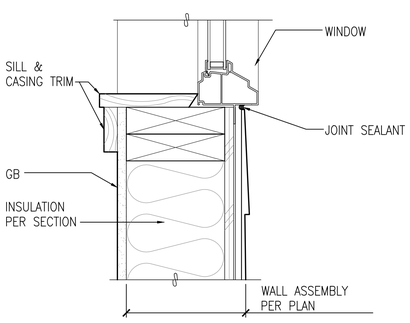

17 SILL DETAIL

SCALE: 3"=1'-0"

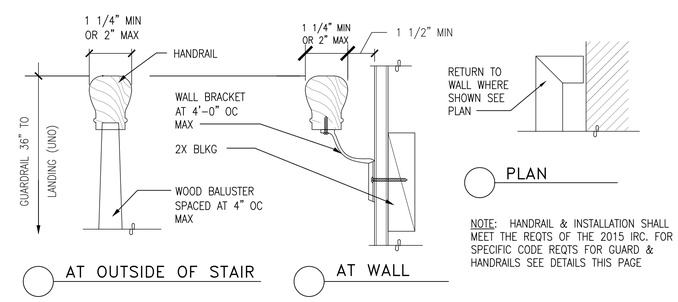

NOTE: HANDRAIL & INSTALLATION SHALL MEET THE REQTS OF THE 2015 IRC. FOR SPECIFIC CODE REQTS FOR GUARD & HANDRAILS SEE DETAILS THIS PAGE

5 TYPICAL HANDRAIL REQUIREMENT

SCALE: NTS

CONSTRUCTION AND REMODELING

TAM CEM - RESIDENCE

Addition & Alteration
4215 Holly Ln, Mercer Island, WA 98040

Permit Set

Job # 24-028

Description	Date
Permit Intake	10/07/24
1 Correction 01	02/04/25
2 Correction 02	03/06/25

Permit No.: 2407-213

Drawn:
Stamp/Approval:

Sheet Name:

DETAILS

Sheet No:

D2.0

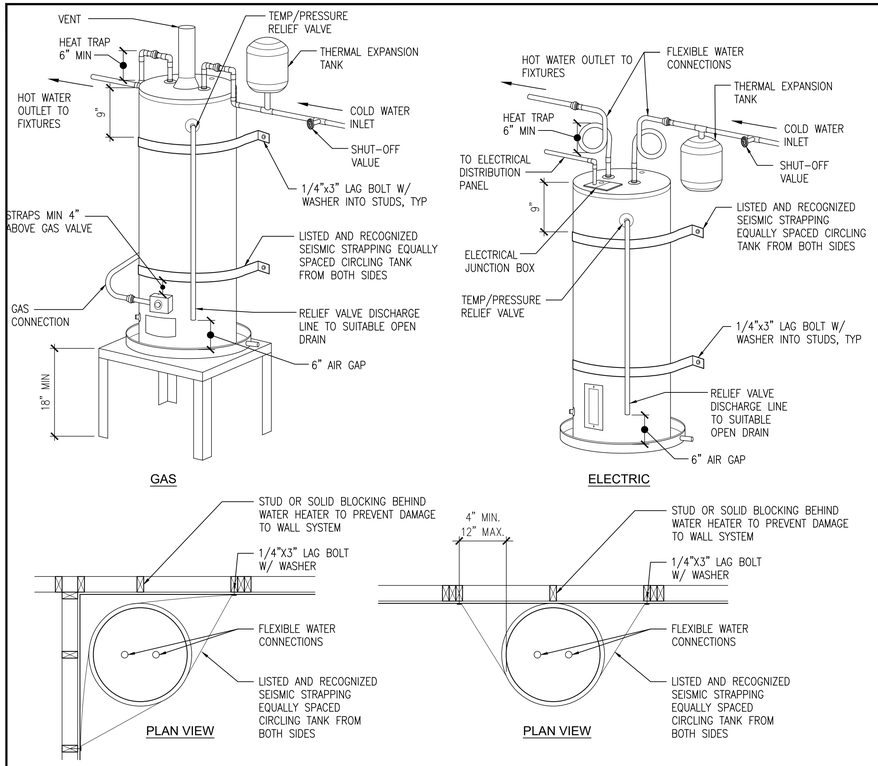

19 WATER HEATER SEISMIC STRAPPING
SCALE: 3/4"=1'-0"

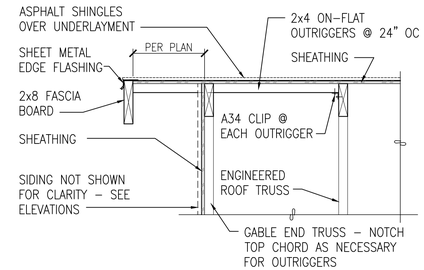

12 DETAIL
SCALE: 1"=1'-0"

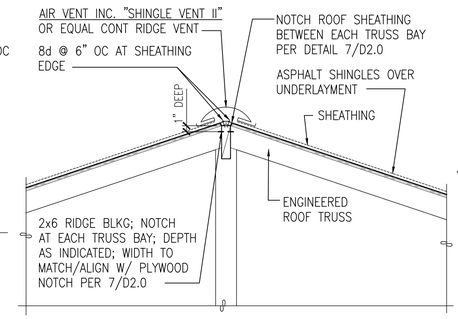

8 DETAIL
SCALE: 1"=1'-0"

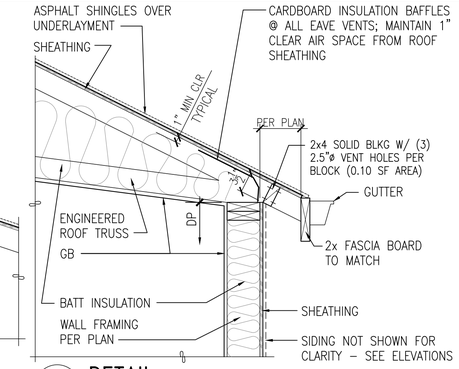

4 DETAIL
SCALE: 1"=1'-0"

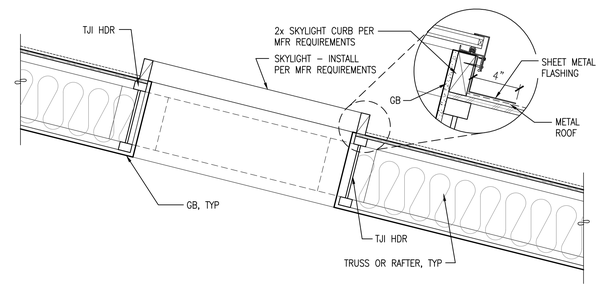

11 DETAIL
SCALE: 1"=1'-0"

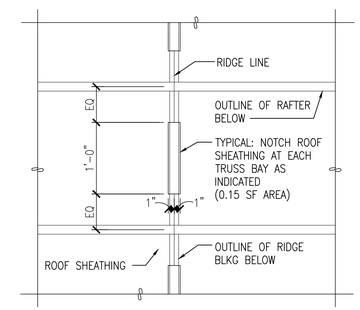

3 DETAIL
SCALE: 1"=1'-0"

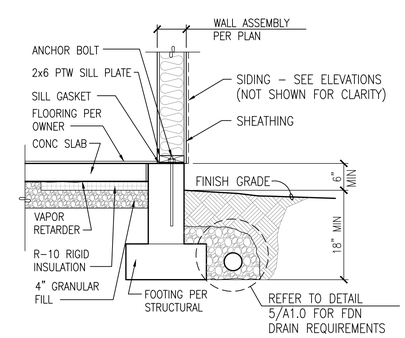

5 DETAIL
SCALE: 3/4"=1'-0"

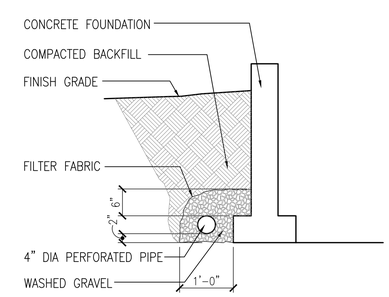

1 FOUNDATION DRAINAGE SYSTEM
SCALE: 3/4"=1'-0"

CONSTRUCTION AND REMODELING

TAM CEM - RESIDENCE

Addition & Alteration
4215 Holly Ln, Mercer Island, WA 98040

Permit Set

Job # 24-028

Description	Date
Permit Intake	10/07/24
1 Correction 01	02/04/25
2 Correction 02	03/06/25

Permit No.: 2407-213

Drawn:
Stamp/Approval:

Sheet Name:

DETAILS

Sheet No:

D3.0

STRUCTURAL NOTES

01000: GENERAL REQUIREMENTS
THE STRUCTURAL NOTES SUPPLEMENT THE PLANS AND SPECIFICATIONS. ANY DISCREPANCY FOUND BETWEEN THE DRAWINGS, NOTES, SPECIFICATIONS, SITE CONDITIONS, AND ARCHITECTURAL PLANS SHALL BE REPORTED TO THE ARCHITECT WHO SHALL CORRECT THE DISCREPANCY IN WRITING. ANY WORK COMPLETED AFTER DISCOVERY OF THE DISCREPANCY SHALL BE DONE AT THE CONTRACTOR'S RISK. REFER TO ARCHITECTURAL PLANS FOR OPENINGS, ARCHITECTURAL TREATMENTS, AND DIMENSIONS NOT SHOWN. CONSULT MECHANICAL PLANS FOR DUCTS AND PIPES ETC. NOT SHOWN.

THE CONTRACTOR SHALL PROVIDE BRACING AND SUPPORT REQUIRED FOR TEMPORARY CONSTRUCTION LOADS AND FOR STRUCTURAL COMPONENTS AS REQUIRED DURING ERECTION. BACKFILL BEHIND WALLS SHALL NOT BE PLACED UNTIL THE WALLS ARE PROPERLY SUPPORTED.

THE CONTRACTOR SHALL BE RESPONSIBLE FOR COORDINATION OF ALL WORK. THE CONTRACTOR SHALL BE RESPONSIBLE FOR THE COORDINATION OF THE EXCAVATION, SHORING, AND OTHER WORK WITH ALL UTILITIES AND ADJACENT PROPERTIES. CALL THE UTILITY LOCATE SERVICE PRIOR TO ANY WORK AT 1-800-424-5555.

01100: CODE REQUIREMENTS
ALL DESIGN AND CONSTRUCTION SHALL CONFORM TO THE 2021 INTERNATIONAL BUILDING CODE AS ADOPTED BY THE CITY OF MERCER ISLAND.

01200: DESIGN LOADS
DEAD LOADS
ROOF: 15 YR. ASPHALT SHINGLES, METAL OR WATER-PROOF MEMBRANE ALLOWED
FLOOR: GYP-CRETE TOPPING IS NOT ALLOWED (0 PSF)

LIVE LOADS

ROOF LIVE	20 PSF
FLOORS (RESIDENTIAL)	40 PSF
DECK	60 PSF

SNOW LOAD DESIGN DATA:
SNOW LOAD DESIGN DATA:
ROOF RAIN-ON-SNOW 25 PSF [SEAW WHITE PAPER, SITE ~103FT EL.]

AUXILLARY LOAD:
ROOF SOLAR-READY (PV) 5 PSF (ENTIRE ROOF)

WIND DESIGN DATA:

BASIC WIND SPEED:	100 MPH (RISK CATEGORY II)
WIND IMPORTANCE FACTOR:	Iw = 1.0
WIND EXPOSURE:	EXPOSURE C
TOPOGRAPHICAL FACTOR:	Kzt = 1.00
INTERNAL PRESSURE COEFFICIENT:	GCpi = +/- 0.18
COMPONENT/CLADDING WIND PRESSURE:	P(C) = 42 PSF*Kzt (ULT)

EARTHQUAKE DESIGN DATA (BOTH BUILDINGS):

SEISMIC IMPORTANCE FACTOR:	Ie = 1.0
SPECTRAL RESPONSE ACCELERATIONS:	Ss = 1.426, S1 = 0.496
SITE CLASS:	SITE CLASS D [DEFAULT]
SPECTRAL RESPONSE COEFFICIENTS:	SDS = 1.141 SD1 = N/A
SEISMIC DESIGN CATEGORY:	SEISMIC DESIGN CATEGORY D
BASIC FORCE RESISTING SYSTEM:	BEARING WALL SYSTEM
RESPONSE MODIFICATION FACTOR:	R = 6.5 (LIGHT FRAME WALLS)
ANALYSIS PROCEDURE:	EQUIVALENT LATERAL FORCE

01300: FOUNDATIONS
EARTHWORK AND FOUNDATIONS SHALL BE CONSISTENT WITH THE GEOTECHNICAL ENGINEERING RECOMMENDATIONS.

THE GEOTECHNICAL DESIGN REPORT PREPARED BY:
AGES ENGINEERING PROJECT NO. A-1705 DATED: AUGUST 20,2024

ALL SITE PREPARATION TO OVERSEEN AND APPROVED BY AGES ENGINEERING. ALL NEW EXTERIOR FOOTINGS SHALL BE A MINIMUM OF 18 INCHES BELOW LOWEST ADJACENT GRADE. PROVIDE A MINIMUM OF 8" FROM EXISTING GRADE TO WOOD SIDING OR PLATES THAT DO NOT HAVE A NATURAL RESISTANCE TO DECAY. ALL FOUNDATIONS SHALL BE FOUNDED ON COMPETENT NATIVE MATERIAL.

FOUNDATIONS HAVE BEEN DESIGNED WITH THE FOLLOWING PARAMETERS:

ALLOWABLE BEARING PRESSURE	2500 PSF
ACTIVE EARTH PRESSURE (YIELDING)	35 PCF
ACTIVE EARTH PRESSURE (AT-REST)	55 PCF
PASSIVE EARTH PRESSURE	300 PCF
COEFFICIENT OF FRICTION	0.35
SOIL PROFILE	SITE CLASS D
FROST DEPTH (MIN. B.O.F. BLW. GRADE)	18 INCHES

NO FOOTINGS SHALL BE FOUNDED ON OR ABOVE LOOSE, ORGANIC OR EXISTING FILL SOILS. THE SAND SUBGRADE SHALL BE COMPACTED OR CLEANED OF LOOSE OR DISTURBED SOIL.

01330: SHOP DRAWING SUBMITTAL PROCESS
SHOP DRAWINGS ARE TO BE SUBMITTED TO THE ARCHITECT AND ENGINEER OF RECORD FOR APPROVAL PRIOR TO FABRICATION. IF SHOP DRAWINGS DIFFER FROM THE APPROVED DESIGN DRAWINGS, NEW DESIGN DRAWINGS BEARING THE SEAL AND SIGNATURE OF A LICENSED WASHINGTON STATE STRUCTURAL ENGINEER SHALL BE SUBMITTED ALONG WITH THE SHOP DRAWINGS TO THE APPROPRIATE JURISDICTION FOR APPROVAL PRIOR TO FABRICATION.

SHOP DRAWINGS SHALL BE REQUIRED FOR THE FOLLOWING:
1. PREFABRICATED WOOD TRUSSES

CALCULATIONS BEARING THE SEAL AND SIGNATURE OF A LICENSED WASHINGTON STATE STRUCTURAL ENGINEER SHALL BE SUBMITTED ALONG WITH THE SHOP DRAWINGS FOR PREFABRICATED PLATED WOOD TRUSSES.

01400: INSPECTIONS AND SPECIAL INSPECTIONS
THE CONTRACTOR SHALL BE RESPONSIBLE TO COORDINATE ALL INSPECTIONS REQUIRED BY THE LOCAL BUILDING DEPARTMENT.

SPECIAL INSPECTIONS ARE NOT REQUIRED FOR GROUP R-3 OCCUPANCIES UNLESS OTHERWISE REQUIRED BY THE BUILDING OFFICIAL.

01401: STRUCTURAL OBSERVATION
STRUCTURAL OBSERVATION IS NOT REQUIRED. FOR REMODELS, IT IS RECOMMENDED (OWNER OPTION) TO REQUEST E.O.R. SITE VISIT TO CONFIRM EXISTING FRAMING ASSUMPTIONS AS PRESENTED ON PLANS. OTHERWISE, IT IS THE CONTRACTOR'S RESPONSIBILITY TO VERIFY IN FIELD (V.I.F.) THE EXISTING LAYOUT AS SHOWN ON PLANS AND TO CONTACT THE E.O.R. IF EXISTING CONDITIONS VARY FROM PLAN.

01700: EXECUTION REQUIREMENTS
INSTALLATION OF ALL STRUCTURAL COMPONENTS SHALL BE AS REQUIRED PER ALL LOCAL CODES.

02000: SITE CONSTRUCTION
ALL SITE CONSTRUCTION SHALL BE CONSISTENT WITH THE GEOTECHNICAL ENGINEERING RECOMMENDATIONS AS NOTED IN THE GEOTECHNICAL ENGINEERING REPORT (SEE SECTION 01300) AND IN SUBSEQUENT DIRECTIVES.

02260: EXCAVATION SUPPORT AND PROTECTION
EXCAVATION FOR FOUNDATIONS SHALL BE PER PLAN DOWN TO UNDISTURBED NATIVE MATERIAL PER THE GEOTECHNICAL ENGINEERING RECOMMENDATIONS. OVER-EXCAVATED AREAS SHALL BE BACKFILLED WITH LEAN CONCRETE OR PER GEOTECHNICAL RECOMMENDATIONS AT THE CONTRACTOR'S EXPENSE.

EXCAVATION SLOPES SHALL BE SAFE AND SHALL NOT BE GREATER THAN THE LIMITS SPECIFIED BY LOCAL, STATE, AND NATIONAL SAFETY REGULATIONS.

INSTALLATION OF CONSTRUCTION SHORING, IF REQUIRED, SHALL BE PER THE SHORING DRAWINGS, NOTES, AND SPECIFICATIONS.

02300: BACKFILL AND COMPACTION
BACKFILL SHALL NOT BE PLACED UNTIL THE REMOVAL OF FORMWORK AND OF ANY DEBRIS. BACKFILL BEHIND ALL WALLS SHALL NOT BE PLACED UNTIL THE WALLS ARE PROPERLY SUPPORTED. ALL BACKFILL MATERIAL AND PLACEMENT PROCEDURES SHALL BE CONSISTENT WITH THE GEOTECHNICAL ENGINEERING RECOMMENDATIONS.

02832: SEGMENTAL RETAINING WALLS
SEGMENTAL RETAINING WALLS AND MECHANICALLY STABILIZED EARTH (MSE) RETAINING WALLS SHALL BE DESIGNED BY OTHERS.

03000: CONCRETE
CONCRETE CONSTRUCTION SHALL CONFORM TO THE AMERICAN CONCRETE INSTITUTE STANDARD ACI 318 "BUILDING CODE REQUIREMENTS FOR STRUCTURAL CONCRETE".

CEMENT AND CONCRETE SHALL CONFORM TO IBC SECTION 1903. ADMIXTURES SHALL BE APPROVED BY THE ENGINEER OF RECORD AND SHALL COMPLY WITH ACI 318 SECTION 3.6. CONCRETE EXPOSED TO FREEZING AND THAWING SHALL HAVE AN AIR ENTRAINING ADMIXTURE CONFORMING TO IBC SECTION 1904.2. THE USE OF WATER SOLUBLE CHLORIDE ION SHALL NOT BE USED.

THE CONTRACTOR SHALL SUBMIT MIX DESIGNS TO ENGINEER OF RECORD FOR APPROVAL FOUR WEEKS PRIOR TO PLACING CONCRETE. MIX DESIGNS SHALL BE REVIEWED FOR CONFORMANCE TO IBC SECTIONS 1904 AND 1905.

CONCRETE HAS BEEN DESIGNED FOR f'c=2500 PSI. FOR QUALITY ASSURANCE, CONCRETE MIX DESIGNS SHALL MEET THE FOLLOWING REQUIREMENTS:

28 DAY STRENGTH f'c (PSI)	MAX. W/C RATIO	MAX. SLUMP (INCHES)	AIR ENTRAINMENT (PERCENT)	SPECIAL INSPECTION REQUIRED	LOCATION AND APPLICATION
3000	0.45	4±1	0±1	NO	FOOTINGS
3000	0.45	4±1	5±1	NO	FOUNDATION WALLS
3000	0.45	4±1	5±1	NO	SLAB ON GRADE, PATIOS
3000	0.45	4±1	5±1	NO	CURBS, WALKS, DRIVES

ONE COMPRESSION TEST MINIMUM SHALL BE COMPILED FOR EVERY 150 CUBIC YARDS OR 5000 SQUARE FEET OF SURFACE AREA FOR EACH MIX DESIGN PLACED EACH DAY. A TEST SHALL BE THE AVERAGE STRENGTH OF TWO CYLINDERS MADE FROM THE SAME SAMPLE AND TESTED AT THE SPECIFIED AGE. ADDITIONAL CYLINDERS MAY BE MADE FOR INFORMATION REGARDING POST TENSIONING, FORM REMOVAL, STRENGTH DEVELOPMENT, OR OTHER PURPOSES. CONCRETE SHALL BE ACCEPTABLE IF:
1. NO TEST FALLS 500 PSI BELOW THE SPECIFIED STRENGTH
2. THE AVERAGE OF ALL SETS OF 3 CONSECUTIVE TESTS DOES NOT FALL BELOW THE SPECIFIED STRENGTH.

CONCRETE NOT MEETING THE ABOVE CRITERIA SHALL BE SUBJECT TO FURTHER TESTING AT NO ADDITIONAL EXPENSE TO THE OWNER.

RESHORING, WHERE REQUIRED, SHALL CONFORM TO ACI 301 SECTION 4.6. SUBMIT PROPOSED RESHORING PLANS TO THE ENGINEER OF RECORD FOR REVIEW.

CHAMFER ALL EXPOSED CORNERS PER THE ARCHITECTURAL PLANS OR 3/4 INCH IF NOT SPECIFIED BY THE ARCHITECT.

REFER TO "01300" FOR APPROVAL PRIOR TO FORMWORK.

03100: REINFORCING STEEL
REINFORCING STEEL DETAILING, FABRICATION, AND PLACEMENT SHALL BE PER ACI 318. REINFORCING STEEL SHALL MEET THE FOLLOWING REQUIREMENTS:

ASTM A-615 DEFORMED BARS GRADE 40 (fy=40 KSI) FOR #3 BARS ONLY
ASTM A-615 DEFORMED BARS GRADE 60 (fy=60 KSI) FOR #4 BARS AND LARGER
ASTM A-706 DEFORMED BARS GRADE 60 (fy=60 KSI) FOR ALL WELDABLE BARS
ASTM A-185 SMOOTH BAR (fy=60 KSI) FOR WELDED WIRE FABRIC

REINFORCING FOR SLABS ON GRADE SHALL BE 12X12 W5XW5 WELDED WIRE FABRIC OR FIBER MESH UNLESS NOTED OTHERWISE. PROVIDE LAP SPLICES PER THE LAP SPLICE SCHEDULE ON SHEET S6.1. REINFORCING STEEL AT ALL WALLS, SLABS, AND FOOTINGS SHALL BE CONTINUOUS AROUND CORNERS ELSE CORNER BARS SHALL BE PROVIDED.

COVER REQUIREMENTS SHALL BE AS FOLLOWS UNLESS NOTED OTHERWISE:

CONCRETE CAST AGAINST EARTH
ALL BAR SIZES . . . . 3"
FORMED SURFACE EXPOSED TO EARTH OR WEATHER
#6 AND LARGER . . . . 2"
#5 AND SMALLER . . . . 1 1/2"
CONCRETE NOT EXPOSED TO EARTH OR WEATHER
WALLS AND JOISTS
#14 AND #18 BARS . . . . 1 1/2"
#11 BARS AND SMALLER . . . . 3/4"
SLABS AND JOISTS
#14 AND #18 BARS . . . . 1 1/2"
#11 BARS AND SMALLER . . . . 1"
BEAMS, COLUMNS
PRIMARY REINFORCEMENT . . . . 1 1/2"
TIES, STIRRUPS, AND SPIRALS . . . . 1 1/2"

REINFORCING STEEL SHALL BE ACCURATELY PLACED AND ADEQUATELY SECURED IN PLACE PRIOR TO CONCRETE PLACEMENT. REINFORCING STEEL SHALL NOT BE FIELD BENT EXCEPT AS NOTED IN THE DESIGN DRAWINGS. WELDING OF REINFORCING STEEL SHALL NOT BE PERMITTED WITHOUT PRIOR APPROVAL OF THE ENGINEER OF RECORD EXCEPT AS NOTED ON THE DESIGN DRAWINGS.

05120: STRUCTURAL STEEL
DESIGN, FABRICATION, AND ERECTION OF STRUCTURAL STEEL SHALL BE IN ACCORDANCE WITH THE LATEST EDITION OF THE AMERICAN INSTITUTE OF STEEL CONSTRUCTION "AISC SPECIFICATION FOR STRUCTURAL STEEL FOR BUILDINGS". MATERIALS SHALL BE IN ACCORDANCE WITH THE FOLLOWING:

STRUCTURAL W SHAPES	ASTM A-992	Fy = 50 KSI
S, M, AND C SHAPES	ASTM A-36	Fy = 36 KSI
STEEL ANGLES	ASTM A-36	Fy = 36 KSI
PLATE MATERIAL	ASTM A-36	Fy = 36 KSI
STRUCTURAL PIPE	ASTM A-53 GRADE B	Fy = 35 KSI
STRUCTURAL TUBE	ASTM A-500 GRADE B	Fy = 46 KSI
HEADED STUDS	ASTM A-108	
WELDING ELECTRODES	E70-XX TYPICAL, U.N.O.	
HIGH STRENGTH BOLTS	ASTM A-325N BEARING TYPE (SNUG TIGHT)	
ANCHOR RODS	ASTM A-307 OR ASTM A-36	
WOOD CONNECTION BOLTS	ASTM A-307	

ALL WELDING SHALL CONFORM TO THE AWS D1-1 "STRUCTURAL WELDING CODE". ALL WELDING SHALL BE PERFORMED BY A WASHINGTON ASSOCIATION OF BUILDING OFFICIALS (WABO) AND AMERICAN WELDING SOCIETY (AWS) CERTIFIED WELDERS. ALL COMPLETE PENETRATION (CP) WELDS SHALL BE ULTRASONICALLY TESTED. ALL FILLET WELDS SHALL BE VISUALLY INSPECTED.

STRUCTURAL STEEL AND CONNECTIONS EXPOSED TO WEATHER SHALL BE HOT DIPPED GALVANIZED AFTER FABRICATION IN COMPLIANCE WITH ASTM A-153. ALL FIELD WELDS EXPOSED TO WEATHER SHALL BE COATED WITH BRUSH APPLIED ZINC-RICH PAINT COMPLYING WITH ASTM A-780.

06071: PRESERVATIVE TREATED WOOD PRODUCTS
PRESERVATIVE TREATED WOOD SHALL BE REQUIRED FOR;

ALL WOOD THAT FORMS THE STRUCTURAL SUPPORT OF THE BUILDING, BALCONIES PORCHES, OR SIMILAR PERMANENT BUILDING APPURTUENCES THAT ARE EXPOSED TO THE WEATHER WITHOUT ADEQUATE PROTECTION FROM A ROOF, EAVE, OVERHANG OR OTHER COVERING TO PREVENT MOISTURE OR WATER ACCUMULATION AT THE SURFACE OR AT JOINTS BETWEEN MEMBERS.

ALL WOOD INSTALLED ABOVE GROUND AND RESTING ON AN EXTERIOR CONCRETE OR MASONRY FOUNDATION WALL LESS THAN 8 INCHES FROM EXPOSED EARTH.

POSTS OR COLUMNS SUPPORTING PERMANENT STRUCTURES AND SUPPORTED BY A CONCRETE SLAB OR FOOTING THAT IS IN DIRECT CONTACT WITH THE EARTH. EXCEPT;

1. IF LOCATED IN BASEMENTS ON A CONCRETE PIER OR METAL PEDESTAL 1 INCH ABOVE THE SLAB AND SEPARATED THEREFROM BY AN IMPERVIOUS MOISTURE BARRIER.
2. IF IN AN ENCLOSED CRAWL SPACE OR AN UNEXCAVATED AREA WITHIN THE BUILDING PERIPHERY AND SUPPORTED BY A CONCRETE PIER OR PEDESTAL MORE THAN 8 INCHES FROM EXPOSED GROUND AND SEPARATED THEREFROM BY AN IMPERVIOUS MOISTURE BARRIER.
3. SLEEPERS AND SILLS ON A CONCRETE SLAB ON GRADE THAT DOES NOT HAVE AN IMPERVIOUS MOISTURE BARRIER SEPARATION WITH EXPOSED EARTH.
4. LEDGERS AND FURRING ATTACHED DIRECTLY TO THE INTERIOR OF EXTERIOR CONCRETE OR MASONRY WALLS BELOW GRADE.

PRESERVATIVE TREATMENT SHALL BE PER AMERICAN WOOD PRESERVERS' ASSOCIATION (AWPA) SPECIFICATION C2 AND C9 OR APPLICABLE STANDARDS.

ALL FASTENERS (NAILS, BOLTS, MASAS, ANCHORS, PLATES, HANGERS, ETC.) IN CONTACT WITH TREATED LUMBER SHALL BE CORROSION RESISTANT G-185 HOT DIPPED GALVANIZED PER ASTM A153 OR STAINLESS STEEL.

06100: ROUGH FRAMING
SAWN LUMBER SHALL CONFORM TO WEST COAST LUMBER INSPECTION BUREAU (WCLIB) "GRADING AND DRESSING RULES" NO. 17 LATEST EDITION. SAWN LUMBER SHALL BE S4S AND SURFACED DRIED, 19 PERCENT MAXIMUM MOISTURE CONTENT. PROTECT LUMBER FROM WEATHER AND PROVIDE FURTHER DRYING OF ASSEMBLED FRAMING TO MINIMIZE WOOD SHRINKAGE POTENTIAL. ALL LUMBER EXPOSED TO WEATHER OR IN CONTACT WITH CONCRETE OR MASONRY SHALL BE PRESERVATIVE TREATED U.N.O. PER PLAN. LUMBER SPECIES, GRADE, AND PROPERTIES FOR EACH USE/LOCATION SHALL BE AS FOLLOWS U.N.O. PER PLAN/SCHEDULE:

SIZE	SPECIES	GRADE	Fb (PSI)	Fv (PSI)	Fcp (PSI)	Fc (PSI)	E (PSI)
2X,4X	DOUGLAS FIR-LARCH	NO. 2	900	180	625	1350	1.6E6
6X	DOUGLAS FIR-LARCH	NO. 1	1200	170	625	1000	1.6E6

06101: STRUCTURAL FINGER JOINTED LUMBER
STRUCTURAL FINGER JOINTED LUMBER SHALL BE PERMITTED TO BE USED INTERCHANGEABLY WITH SAWN LUMBER MEMBERS OF THE SAME SPECIES AND GRADE. STRUCTURAL FINGER JOINTED LUMBER SHALL BE GRADED UNDER AMERICAN LUMBER STANDARD COMMITTEE "PRODUCT STANDARD PS 20-99". LUMBER CLASSIFIED AS STUD USE ONLY SHALL BE LIMITED TO VERTICAL APPLICATIONS ONLY. LUMBER WITH CERTIFIED EXTERIOR JOINTS IS NOT RESTRICTED TO ANY TYPE OF LOADING.

06102: FRAMING NOTES
FRAMING CONNECTORS, ACCESSORIES, AND FASTENERS AS NOTED IN THE PLANS AND DETAILS SHALL BE AS MANUFACTURED BY SIMPSON STRONG-TIE. EQUIVALENT HARDWARE MAY BE USED WITH PRIOR APPROVAL BY ENGINEER OF RECORD. INSTALL ALL HARDWARE PER MANUFACTURERS' SPECIFICATIONS. WHERE STRAPS CONNECT TWO MEMBERS TOGETHER, PLACE HALF OF THE REQUIRED FASTENERS INTO EACH MEMBER. PROVIDE SOLID BLOCKING AT ALL BEARING POINTS. SEE SECTION 06071 FOR FASTENER REQUIREMENTS AT TREATED LUMBER. TYPICAL NAILING NOT SHOWN PER PLAN, DETAIL, OR SCHEDULE SHALL CONFORM TO FASTENING SCHEDULE PER IBC TABLE 2304.10.1 OR TO THE FASTENING SCHEDULE ON SHEET S1.0.

NAILS SHALL BE COMMON UNLESS NOTED OTHERWISE COMMON NAIL DIMENSIONS ARE AS FOLLOWS:

NAIL SIZE	DIAMETER	LENGTH
8d	0.131"	2.5"
10d	0.148"	3.0"
12d	0.148"	3.25"
16d	0.162"	3.5"

UNLESS NOTED OTHERWISE PER SHEARWALL SCHEDULE OR PLANS, 5/8"ø ANCHOR BOLTS AT SILL PLATES SHALL BE PLACED AT 48" O.C. PER 5/S1.2. THERE SHALL BE A MINIMUM OF 2 BOLTS PER SILL PIECE WITH ONE BOLT LOCATED NOT MORE THAN 12 INCHES NOR LESS THAN 8 INCHES FROM EACH END OF THE PIECE.

06103: JOIST AND BEAM HANGERS
JOIST AND BEAM HANGERS AS NOTED IN THE PLANS SHALL BE AS MANUFACTURED BY SIMPSON STRONG-TIE. EQUIVALENT HARDWARE MAY BE USED WITH PRIOR APPROVAL BY ENGINEER OF RECORD. JOIST AND BEAM HANGERS SHALL BE INSTALLED PER MANUFACTURERS' SPECIFICATIONS AND SHALL BE AS FOLLOWS UNLESS NOTED OTHERWISE PER PLANS OR DETAILS:

MEMBER SIZE	HANGER
SAWN LUMBER	"HUS" SERIES TO MATCH LUMBER SIZE [0.162x3½" NAILS]
MANUF. WOOD "I" JOIST	"IUS" SERIES TO MATCH "I" JOIST SIZE TO WOOD BM. "BA" SERIES TO 2X MIN. NAILER ON STL. BM.
1.75" WIDE PSL OR LVL BEAM	"HUS1.81" SERIES TO MATCH DEPTH [0.162x3½" NAILS]
3.5" WIDE PSL OR LVL BEAM	"HGUS3.63" SERIES TO MATCH DEPTH [SDS25212 SCREWS]
5.25" WIDE PSL OR LVL BEAM	"HGUS5.5" SERIES TO MATCH DEPTH [SDS25212 SCREWS]
7" WIDE PSL BEAM	"HGU7.25" SERIES TO MATCH DEPTH [SDS25212 SCREWS]

06104: SHRINKAGE OF WOOD FRAMING
SHRINKAGE IN WOOD FRAMING IS DUE TO LOSS OF MOISTURE CONTENT AND TO COMPRESSION OF ASSEMBLIES OF WOOD COMPONENTS. PLUMBING, ELECTRICAL, AND MECHANICAL SYSTEMS AS WELL AS EXTERIOR FINISHES SHALL BE DESIGNED AND BUILT TO ACCOMMODATE 3/8 INCH PER FLOOR WOOD SHRINKAGE. THE USE OF KILN DRIED LUMBER AND PROVIDING A DRYING PROCESS TO THE FRAMING MEMBERS PRIOR TO APPLICATION OF FINISHES WILL HELP CONTROL BUT WILL NOT ELIMINATE SHRINKAGE.

06160: WOOD SHEATHING
WOOD STRUCTURAL PANELS (WSP) SHALL HAVE APA GRADE TRADEMARK OF THE AMERICAN PLYWOOD ASSOCIATION. WOOD SHEATHING PANELS SHALL BE C-D INT APA WITH EXTERIOR GLUE (CDX). ORIENTED STRAND BOARD (OSB) PANELS SHALL BE EXPOSURE 1. PANELS SHALL HAVE THE FOLLOWING THICKNESS, SPAN RATING, AND FASTENING UNLESS NOTED OTHERWISE PER PLAN:

		(P.E.N.) EDGE NAILS	FIELD NAILS
ROOF:	7/16" APA 24:16 [MIN.-REF. ARCH] C-D W/EXTERIOR GLUE	8d AT 6"	8d AT 12"
FLOORS:	3/4" STURD-I-FLOOR OSB 48/24 T&G	10d AT 6"	10d AT 12"
SHEARWALL:	7/16" C-D W/EXTERIOR GLUE, U.N.O.	RE: SCHEDULE SHEET S1.2	

ALL ROOF AND FLOOR SHEATHING PANELS SHALL BE INSTALLED FACE GRAIN PERPENDICULAR TO SUPPORTS AND IN A STAGGERED PATTERN UNLESS NOTED OTHERWISE PER PLAN. BLOCKING AT INTERMEDIATE FLOOR AND ROOF SHEATHING JOINTS SHALL NOT BE REQUIRED UNLESS NOTED OTHERWISE PER PLAN. SHEARWALL SHEATHING SHALL BE BLOCKED AT ALL EDGES WITH 2X OR 3X FRAMING PER SHEARWALL SCHEDULE. WHERE FRT ROOF PLY IS REQUIRED AT PARTY WALL STRENGTH PER MFR. SHALL BE EQUAL OR BETTER THAN 24/16 APA-RATED SPAN.

06175 SHOP FABRICATED METAL PLATE CONNECTED WOOD TRUSSES
PREMANUFACTURED PLATED WOOD TRUSSES SHALL BE MANUFACTURER DESIGNED AND SHALL COMPLY WITH THE TRUSS PLATE INSTITUTE (ANSI/TPI 1, NATIONAL DESIGN STANDARD FOR METAL PLATE CONNECTED WOOD TRUSS CONSTRUCTION" AND IBC SECTION 2303.4. SHOP DRAWINGS AND CALCULATIONS SHALL BE SUBMITTED PER THE REQUIREMENTS OF SECTION 01330. DESIGN FOR THE SPANS AND CONDITIONS SHOWN ON THE PLANS, LOADS PER SECTION 01200, AND THE FOLLOWING:

TOP CHORD LIVE LOAD	SEE SECTION 01200
TOP CHORD DEAD LOAD	11 PSF
TOP CHORD NET WIND UPLIFT	12 PSF
BOTTOM CHORD DEAD LOAD	7 PSF
LIVE LOAD DEFLECTION	L/360

WOOD DURATION FACTORS:
SNOW & LIVE C_D=1.0
CONSTRUCTION C_D=1.25
WIND C_D=1.6

06185: STRUCTURAL GLUED LAMINATED TIMBER
GLUED LAMINATED MEMBERS SHALL HAVE AMERICAN INSTITUTE OF TIMBER CONSTRUCTION (AITC) IDENTIFICATION MARK. EXPOSED MEMBERS SHALL RECEIVE ONE COAT OF END SEALER APPLIED IMMEDIATELY AFTER TRIMMING IN EITHER SHOP OR FIELD. SHOP DRAWINGS SHALL BE SUBMITTED PER THE REQUIREMENTS OF SECTION 01330. DESIGN MATERIAL PROPERTIES SHALL BE AS FOLLOWS:

USE	COMBINATION SYMBOL	SPECIES	LAYOUT
SIMPLE SPAN BEAM	24F-V4	DF/DF	STANDARD
CONTINUOUS BEAM	24F-V8	DF/DF	BALANCED
CANTILEVER BEAM	24F-V8	DF/DF	BALANCED

UNEXPOSED GLUED LAMINATED TIMBER SHALL BE INDUSTRIAL GRADE. TYPICAL, UNLESS NOTED OTHERWISE. EXPOSED GLUED LAMINATED TIMBER SHALL BE APPEARANCE CLASS PER ARCHITECT.

06190: MANUFACTURED WOOD BEAMS
MANUFACTURED/ENGINEERED WOOD BEAMS SHALL BE THE SIZE AND TYPE SHOWN ON THE DRAWINGS AS MANUFACTURED BY TRUS-JOIST OR APPROVED EQUAL. STORAGE, ERECTION, AND INSTALLATION SHALL BE PER MANUFACTURER SPECIFICATIONS. MICROLAM AND PARALLAM MEMBERS SHALL NOT HAVE NOTCHES OR DRILLED HOLES WITHOUT PRIOR ENGINEER OF RECORD APPROVAL. SHOP DRAWINGS SHALL BE SUBMITTED PER THE REQUIREMENTS OF SECTION 01330. DESIGN MATERIAL PROPERTIES SHALL BE AS FOLLOWS:

MEMBER	E	Fb	Fcp	Fv	E MIN.
LVL (MICROLAM)	1.9E6	2600	750	285	965,710
PSL (PARALLAM)	2.0E6	2900	750	290	1,016,535
1.55E LSL (TIMBERSTRAND)	1.55E6	2325	800	310	787,815
LSL RIM (TIMBERSTRAND)	1.3E6	1700	680	400	660,750

STRUCTURAL DETAILS & NOTES SHEET INDEX

SHEET	DESCRIPTION	DATE
S1.1	STRUCTURAL GENERAL NOTES	03/06/25
S1.2	SHEARWALL SCHEDULE AND NOTES	03/06/25
S1.3	HOLD DOWN SCHEDULE AND NOTES	03/06/25
S1.4	SPECIAL INSPECTION TABLES AND NOTES	03/06/25
S2.1	FOUNDATION & MAIN FLOOR FRAMING PLAN	03/06/25
S2.2	FOUNDATION & MAIN FLOOR FRAMING PLAN	03/06/25
S2.3	SECOND FLOOR FRAMING PLAN	03/06/25
S2.4	ROOF FRAMING PLAN	03/06/25
DETAILS		
S6.1	FOUNDATION DETAILS	03/06/25
S7.4	SHEET WSWH4: STRONGWALL FRAMING DETAILS	03/06/25
S7.5	SHEET WSWH5: STRONGWALL FRAMING DETAILS	03/06/25
S7.6	SHEET WSWH6: STRONGWALL FRAMING DETAILS	03/06/25
S9.1	FRAMING DETAILS	03/06/25
S9.2	STEEL FRAMING DETAILS	03/06/25

ABBREVIATIONS

&	AND
@	AT
'	FEET(FOOT)
"	INCH (INCHES)
#	POUND(S), NUMBER
=	EQUAL(S)
/	PER, OF
A.B.	ANCHOR BOLT
ABV.	ABOVE
ADD.	ADDITIONAL
ADJ.	ADJACENT
ALUM.	ALUMINUM
ALT.	ALTERNATE
APPRX.	APPROXIMATE(LY)
ARCH.	ARCHITECT(URAL)
ASSY	ASSEMBLY
B.	BOTTOM
BEL.	BELOW
BEN	BOUNDARY EDGE NAILING
B.F.	BRACED FRAME
BLDG.	BUILDING
BLK.	BLOCK
BLKG.	BLOCKING
BLW.	BELOW
BM.	BEAM
BMU	BRICK MASONRY UNIT
BN	BOUNDARY NAILING
BNDRY.	BOUNDARY
B.O.	BOTTOM OF
B.O.E.	BOTTOM OF EXCAVATION
B.O.F.	BOTTOM OF FOOTING
BRDG.	BRIDGE(ING)
BRG.	BEARING
BTM.	BOTTOM
BTWN.	BETWEEN
C	CAMBER
CAMB.	CAMBER(ED)
CANT.	CANTILEVER(ED)
CF	CUBIC FOOT
C.I.P.	CAST IN PLACE
C.J.	CONSTRUCTION JOINT
CL	CENTER LINE
CLG.	CEILING
CLR.	CLEAR
COL.	COLUMN
CONC.	CONCRETE
CONN.	CONNECTION
CONST.	CONSTRUCTION
CONT.	CONTINUOUS
CTSK.	COUNTERSINK
CTR.	CENTER(ED)
CVR	COVER VERTICAL REINF.
CY	CUBIC YARD
d, D	PENNY(NAILS)
DB	DROPPED BEAM
DBA	DEFORMED BAR ANCHORS
DBL.	DOUBLE
DCW	DEMAND CRITICAL WELD
DEPT.	DEPARTMENT
DET.	DETAIL
DF	DOUGLAS FIR
DIA.	DIAMETER
DIAG.	DIAGONAL
DIAPH.	DIAPHRAGM
DIM.	DIMENSION
DN.	DOWN
D.O.	DITTO(REPEAT)
DP.	DEEP
D.S.	DRAG STRUT
DWG.	DRAWING(S)
DWL.	DOWEL(S)
(E)	EXISTING
EA.	EACH
E.E.	EACH END
E.F.	EACH FACE
E.J.	EXPANSION JOINT
EL.	ELEVATION
ELEV.	ELEVATOR
EMBD.	EMBED(MENT)
EN	EDGE NAIL
ENG.	ENGINEER
E.O.	EVERY OTHER
EQ.	EQUAL
EQPT.	EQUIPMENT
E.W.	EACH WAY
EXP.	EXPANSION
EXST.	EXISTING
EXT.	EXTERIOR
FAB.	FABRICATION
FB	FLUSH BEAM
FDN.	FOUNDATION
F.F.	FINISH FLOOR
FJ	FLOOR JOIST
FIN.	FINISH(ED)
FLG.	FLANGE
FLR.	FLOOR
FN	FIELD (FACE) NAIL
F.O.	FINISHED OPENING
F.O.C.	FACE OF CONCRETE
F.O.M.	FACE OF MASONRY
F.O.S.	FACE OF STUD
F.O.W.	FACE OF WALL
FRMG.	FRAME(ING)
F.S.	FAR SIDE
FSD	FORMED STEEL DECK
FT.	FEET(FOOT)
FRTW	FIRE RETARDANT TREATED WOOD
FTG.	FOOTING
GA.	GAUGE
GALV.	GALVANIZE(D)
GB.	GRADE BEAM
GLB	GLUE LAMINATED BEAM
GRD.	GRADE
GWB	GYPSUM WALLBOARD
GYP.	GYPCRETE
H.	HORIZONTAL
HD	HOLDOWN
H.D.G.	HOT DIPPED GALVANIZED
HDR.	HEADER
HF	HEM FIR
HGR.	HANGER
HORZ.	HORIZONTAL
HORIZ.	HORIZONTAL
HR	HEADER
H.S.B.	HIGH STRENGTH BOLT
HT.	HEIGHT
I.D.	INSIDE DIAMETER
I.E.	INVERT ELEVATION
I.F.	INSIDE FACE
IN.	INCHE(S)
INFO.	INFORMATION
INT.	INTERIOR

JST.	JOIST
JT.	JOINT
K	KIPS(1000)
LAT.	LATERAL
LB.	POUND(S)
L.B.	LAG BOLT(S)
LG.	LONG(ITUDINAL)
LGTH.	LENGTH
LGMF	LIGHT GAUGE METAL FRAMING
LLH	LONG LEG HORIZONTAL
LLV	LONG LEG VERTICAL
LSH	LONG SLOTTED HOLE(S)
LSL	LAMINATED STRAND LUMBER
LT. WT.	LIGHT WEIGHT
LVL	LAMINATED VENEER LUMBER
L.W.	LIGHT WEIGHT
MAS.	MASONRY
MASN.	MASONRY
MAT.	MATERIAL
MAX.	MAXIMUM
M.B.	MACHINE BOLT
MBM	METAL BUILDING MANUFACTURER
MECH.	MECHANICAL
M.E.J.	MASONRY EXPANSION JOINT
MEZZ.	MEZZANINE
MFR.	MANUFACTURER
MIN.	MINIMUM
MISC.	MISCELLANEOUS
MTL.	METAL
(N)	NEW
N/A	NOT APPLICABLE
N.L.B.	NON-LOAD BEARING
NO.	NUMBER
N.S.	NEAR SIDE
N.T.S.	NOT TO SCALE
N.W.C.	NORMAL WEIGHT CONCRETE
O/	OVER
O.C.	ON CENTER
O.D.	OUTSIDE DIAMETER
O.F.	OUTSIDE FACE
O.H.	OPPOSITE HAND
OPNG.	OPENING
OPP.	OPPOSITE
O.R.	OUTRIGGERS
ORNT.	ORIENTATE(ION)
OSB	ORIENTED STRAND BOARD
O.W.J.	OPEN WEB JOIST
O.W.T.	OPEN WEB TRUSS
PAF	POWDER ACTUATED FASTENER
PAR.	PARALLEL
P/C	PRECAST
PEN	PANEL EDGE NAIL
PEN.	PENETRATION
PERP.	PERPENDICULAR
PL.	PLATE
PL	PROPERTY LINE
PLN	PLAN
PLMBG.	PLUMBING
PLYWD.	PLYWOOD
PMT	PREMANUF. WOOD TRUSS
PSF	POUNDS PER SQUARE FOOT
PSL	PARALLAM STRAND LUMBER
PSI	POUNDS PER SQUARE INCH
P.T.	PRESERVATIVE TREATED
PT	POST TENSION(ED)
QTY.	QUANTITY
R.	RADIUS
RAD.	RADIUS
RE:	REFERENCE
REF.	REFERENCE
REINF.	REINFORCEMENT(ING)
REQ.	REQUIRED
R.F.	RIGID FRAME
R.O.	ROUGH OPENING
RR	ROOF RAFTER
R.S.	ROUGH SAWN
SCH.	SCHEDULE
SCL	STRUCTURAL COMPOSITE WOOD
SCHED.	SCHEDULE
SHT.	SHEET
SIM.	SIMILAR
S.J.	SHRINKAGE CONTROL JOINT
SKW.	SKEW(ED)
S.O.G.	SLAB ON GRADE
SPC.	SPACE(S) (ING)
SPEC.	SPECIFICATION(S)
SQ.	SQUARE
STD.	STANDARD
STGR.	STAGGER
STIFF.	STIFFENER(S)
STIR.	STIRRUP(S)
STL.	STEEL
STRUC.	STRUCTURAL
STRUCT.	STRUCTURAL
SUSP.	SUSPENDED(TION)
SW	SHEARWALL
SYMM.	SYMMETRICAL
T.	TOP
T.&B.	TOP AND BOTTOM
TEMP.	TEMPORARY
T.&G.	TONGUE AND GROOVE
THK.	THICK(NESS)
THRD.	THREADED
TN	TOE NAIL
T.O.S.	TOP OF SHEATHING(SLAB)
T.O.W.	TOP OF WALL
TRANSV.	TRANSVERSE
T.O.S..	TOP OF STEEL
TYP.	TYPICAL
U.N.O.	UNLESS NOTED OTHERWISE
U/S	UNDERSIDE
V.	VERTICAL
VERT.	VERTICAL
VIF	VERIFY IN FIELD
W.	WIDE(WIDTH)
W/	WITH
W/O	WITHOUT
WD.	WOOD
W.H.S.	WELDED HEADED STUDS
W.P.	WORK POINT
W.S.	WELDED STUD
WSP	WOOD STRUCTURAL PANEL
WT.	WEIGHT
W.W.F.	WELDED WIRE FABRIC
X-STG	EXTRA STRONG
XX-STG	DOUBLE EXTRA STRONG
YD	YARD

CONSTRUCTION
AND REMODELING

TAM CEM - RESIDENCE
Addition & Alteration
4215 Holly Ln, Mercer Island, WA 98040

Permit Set

Job # 24-028 TE# 24307

Description	Date
Permit Intake	10/07/24
1 Correction 01	02/04/25
2 Correction 02	03/06/25

Tryg·stad
ENGINEERING
nels@trygstadeng.com
(208)262-6884

Permit No.: 2407-213

Drawn:
Stamp/Approval:
NELS E. TRYGSTAD STATE OF WASHINGTON REGISTERED PROFESSIONAL ENGINEER 46552 03/06/25 RENEWAL 11/30/26

Sheet Name:
STRUCTURAL GENERAL NOTES

Sheet No:
S1.1

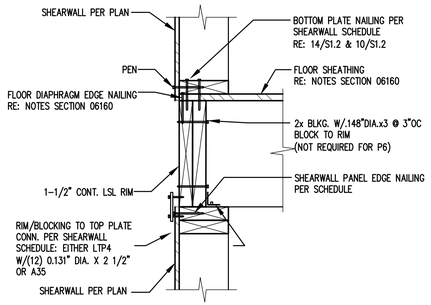

1 TYPICAL EXTERIOR SHEARWALL CONNECTION P6, P4 & P3

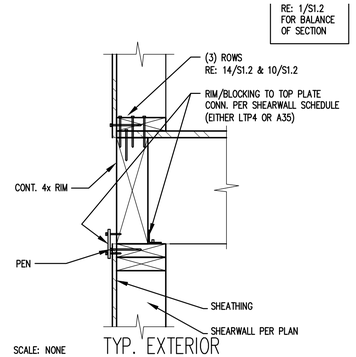

SCALE: NONE

2 TYP. EXTERIOR SHEARWALL CONNECTION P2

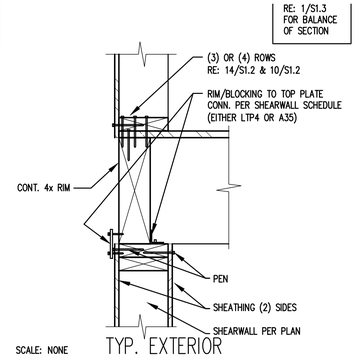

SCALE: NONE

3 TYP. EXTERIOR SHEARWALL CONNECTION 2P4, 2P3, 2P2

(#) REFER TO DETAIL 12

SHEARWALL SCHEDULE – 7/16" APA RATED SHEATHING

WALL TYPE	SHEATHING	PANEL EDGE NAILING ③	FIELD NAILING ④	BOTTOM PLATE NAILING ⑦		RIM OR BLOCKING TO TOP PLATE CONN.			FRAMING AT ADJOINING PANEL EDGES ⑤	FOUNDATION SILL PLATE ⑫	ANCHOR BOLT SPACING 5/8" DIA. 7" EMBED ⑬
				ROWS	SPACING	0.148"x3.25" TOENAIL	LTP4 DIRECT TO FRAMING	A35 ONLY ⑩			
UNMARKED EXTERIOR P6	7/16" SHT. ONE SIDE	6" O.C.	12" O.C.	(1)	4" O.C.	N/A	24" O.C.	24" O.C.	2x	2x 3x	48" O.C. 48" O.C.
P4	7/16" SHT. ONE SIDE	4" O.C.	12" O.C.	(2)	6" O.C.	N/A	16" O.C.	16" O.C.	(2)2x OR 3x	2x 3x	32" O.C. 40" O.C.
P3	7/16" SHT. ONE SIDE	3" O.C.	12" O.C.	(2)	4" O.C.	N/A	16" O.C.	12" O.C.	(2)2x OR 3x	2x 3x	24" O.C. 22" O.C.
P2	7/16" SHT. ONE SIDE	2" O.C.	12" O.C.	(3)	6" O.C.	N/A	12" O.C.	10" O.C.	(2)2x OR 3x	2x 3x	18" O.C. 24" O.C.
2P4	7/16" SHT. BOTH SIDES	4" O.C.	12" O.C.	(3)	5" O.C.	N/A	10" O.C.	8" O.C.	(2)2x OR 3x	2x 3x	16" O.C. 20" O.C.
2P3	7/16" SHT. BOTH SIDES	3" O.C.	12" O.C.	(3)	4" O.C.	N/A	8" O.C.	6" O.C.	(2)2x OR 3x	2x 3x	12" O.C. 16" O.C.
2P2	7/16" SHT. BOTH SIDES	2" O.C.	12" O.C.	(3)	3" O.C.	N/A	6" O.C.	5" O.C.	(2)2x OR 3x	2x 3x	8" O.C. 12" O.C.
PF	APA SITE-BUILT PORTAL FRAME PER DETAIL REFERENCED ON PLAN										
WSWH__X_	SIMPSON STRONG-WALL; REFER TO DETAILS REFERENCED IN PLANS										

SHEARWALL SCHEDULE NOTES:

A. STUDS SHALL NOT BE SPACED MORE THAN 16" O.C..
B. RE: S1.1 SECTION 06100 "ROUGH FRAMING" FOR REQUIRED WALL STUD AND PLATE SPECIES AND GRADE.
C. RE: S1.1 SECTION 06160 "WOOD SHEATHING" FOR REQUIRED SHEAR WALL SHEATHING, THICKNESS AND GRADE. ALL SHEAR WALL PANELS SHALL BE APPLIED DIRECTLY TO FRAMING.
D. SHEATHING PANELS MAY BE INSTALLED EITHER HORIZONTALLY OR VERTICALLY WITH ALL PANEL EDGES BACKED/BLOCKED WITH 2" NOMINAL OR WIDER FRAMING. SEE NOTE 5.
E. FRAMING MEMBERS RECEIVING EDGE NAILING FROM ABUTTING PANELS SHALL NOT BE LESS THAN 3" NOMINAL AND NAILS SHALL BE STAGGERED FOR ALL SHEARWALL MARKS EXCEPT "P6".
F. WHERE PANELS ARE APPLIED ON BOTH FACES OF A WALL AND NAIL SPACING IS LESS THAN 6" O.C. ON EITHER SIDE, PANEL JOINTS SHALL BE OFFSET TO FALL ON DIFFERENT FRAMING MEMBERS OR FRAMING SHALL BE 3" NOMINAL OR THICKER AND NAILS SHALL BE STAGGERED.
G. NAILS FOR PLYWOOD AND OSB PANEL EDGE AND FIELD NAILING SHALL BE 8d COMMON (0.131" X 2 1/2").
[REMODELS: SHEATHING MAY BE INSTALLED OVER (E)1X HORZ. LUMBER SHEATHING USING 0.131"x3" NAILS]
H. NAILS FOR BOTTOM PLATE FRAMING SHALL BE 12d COMMON (0.148" X 3.25").
I. FLOOR DIAPHRAGM NAILING SHALL BE PLACED BETWEEN THE SPACING CALLED OUT FOR BOTTOM PLATE NAILING. DO NOT OVER NAIL THE BLOCKING.
J. ANCHOR BOLTS SHALL BE GALVANIZED 5/8"Ø BOLTS: C.I.P. J-BOLTSx10" EMBEDDED 7" OR POST-INSTALLED TITEN HDx8".
K. GALVANIZED 3" X 3" X 0.229" (MIN.) PLATE WASHERS ARE REQUIRED AT EACH ANCHOR BOLT – SEE DETAIL 8 THIS SHEET FOR PLACEMENT DETAILS. RECESSING PLATE WASHERS IN PLATES IS NOT ALLOWED.
L. LTP4 FRAMING PLATES SHALL BE INSTALLED WITH 12-8d X 1 1/2" (0.131" X 2 1/2") NAILS. RE: DETAILS 1, 2, 3 & 6/S1.2.
M. A35 FRAMING ANGLES SHALL BE INSTALLED WITH 12-8d X 1 1/2" (0.131" X 1 1/2") NAILS. RE: DETAILS 1, 2 & 3S1.2.
N. ALL NAILS INTO PRESSURE TREATED WOOD SHALL BE HOT-DIPPED GALVANIZED CONFORMING TO ASTM 153 OR STAINLESS STEEL.
O. ALL WOOD IN CONTACT WITH CONCRETE OR MASONRY SHALL BE PRESERVATIVE TREATED.
P. WHERE BOTTOM PLATE NAILING SPECIFIES A SPACING OF 4 INCHES OR LESS NAILS SHALL BE INSTALLED IN TWO ROWS OFFSET 1/2 INCH AND STAGGERED.
Q. GALVANIZED EXPANSION ANCHORS OF SIMILAR. DIAMETER AND EMBEDMENT ALLOWED AT INTERIOR BEARING AND PARTY WALLS.
R. 2-2x'S IN LIEU OF 3x'S AT PANEL EDGES ACCEPTABLE PROVIDED STUDS ARE ATTACHED PER 10/S1.2 SIM. AND BOTTOM PLATE NAILING.
S. WHERE BUILDING OFFICIALS ALLOW, OSB SHEATHING MAY BE APPLIED OVER 1/2" OR 3/8" GYPSUM WALL BOARD PROVIDED SHEATHING IS NAILED WITH 10d NAILS (0.148" DIA X 3" LONG)

14 SHEARWALL SCHEDULE

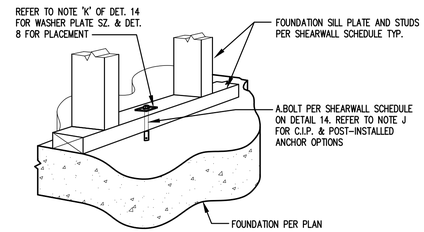

SCALE: 3/4" = 1'-0"

5 TYP. SHEARWLL ANCHOR BOLT TO CONCRETE

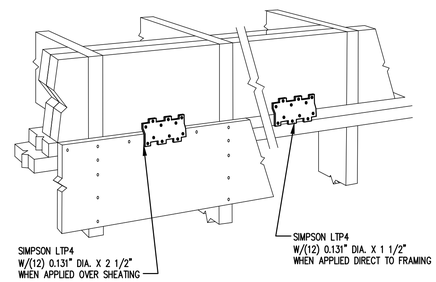

SCALE: NONE

6 TYPICAL SIMPSON LTP4

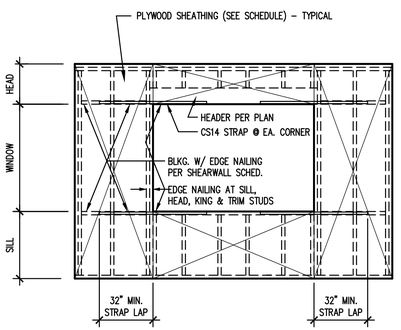

SCALE: NONE

7 STRAPPING at OPENING

NOTE: PLATE WASHER SHALL EXTEND WITHIN 1/2" OF EDGE OF BOTTOM PLATE ON SIDE(S) WITH SHEATHING. PROVIDE STAGGERED/OFFSET PLACEMENT AS SHOWN ELSE OVESIZE PLATE WASHERS AS REQUIRED.

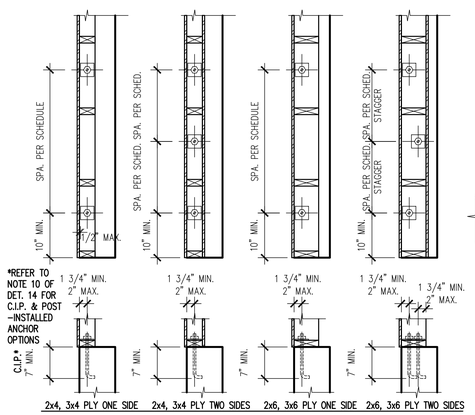

8 ANCHOR BOLT PLACEMENT DETAILS

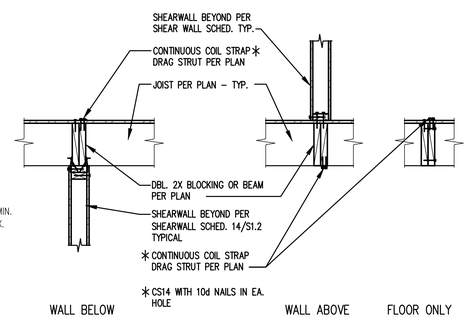

9 DRAG STRUT DETAILS

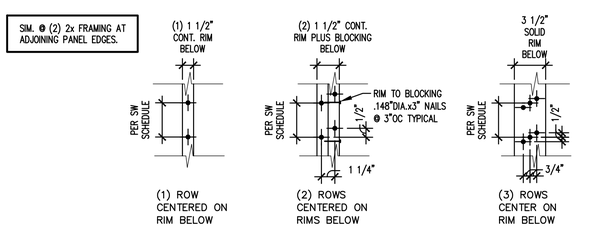

SCALE: NONE

10 BOTTOM PLATE NAILING PATTERN

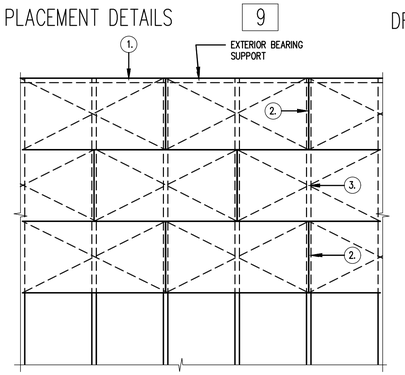

ROOF/FLOOR SHEATHING NOTES

1. BOUNDARY NAILING AT ROOF/FLOOR PERIMETER, AT CONT. PANEL EDGES (B.N.)
2. EDGE NAILING (P.E.N.) AT ALL EDGES OF ALL PLYWOOD SHEETS AT SUPPORTS AND AT INTERIOR SHEARWALLS
3. INTERIOR FIELD NAILING (F.N.) 12" O.C. AT BEARING SUPPORTS
4. SEE PLANS FOR PLYWOOD THICKNESS & NAILING SCHEDULE
5. LONG DIMENSION OF PLYWOOD SHALL RUN PERPENDICULAR TO TRUSS SYSTEM FRAMING & FLOOR FRAMING.
6. MIN. EDGE DISTANCE FOR NAILS SHALL BE 3/8"
7. MINIMUM PLYWOOD SHEET SIZE 2'-0" X 4'-0"
8. NAILS SHALL NOT BE OVER DRIVEN

11 ROOF/FLOOR SHEATHING LAYOUT

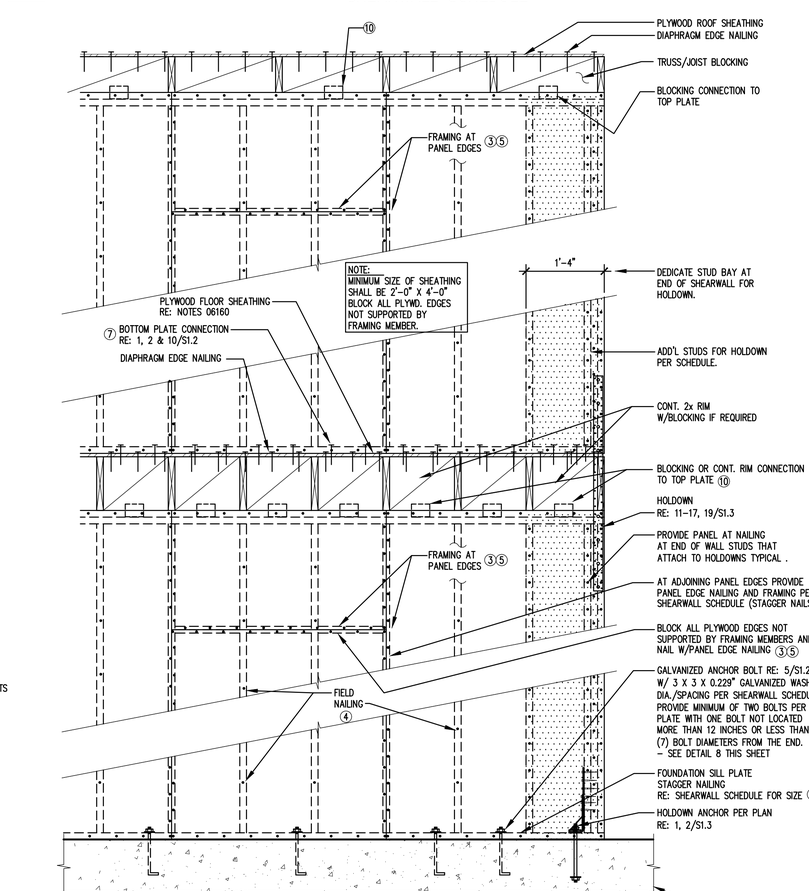

SCALE: NONE

12 TYPICAL SHEARWALL NOMENCLATURE (ELEVATION)

CONSTRUCTION AND REMODELING

TAM CEM - RESIDENCE

Addition & Alteration
4215 Holly Ln, Mercer Island, WA 98040

Permit Set

Job # 24-028 TE# 24307

Description	Date
Permit Intake	10/07/24
Correction 01	02/04/25
Correction 02	03/06/25

Tryg·stad ENGINEERING
nels@trygstadeng.com
(208)262-6884

Permit No.: 2407-213

Drawn:
Stamp/Approval:

Sheet Name:

SHEARWALL SCHEDULE & NOTES

Sheet No:

S1.2

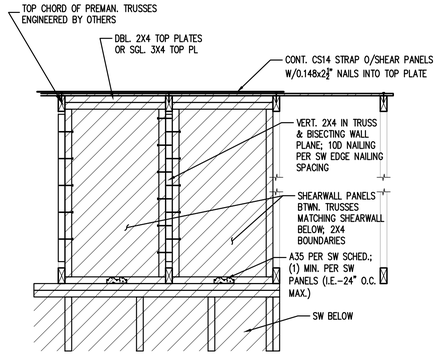

1 ATTIC SHEATHING BTWN. TRUSSES

HOLDOWN & FASTENER SCHEDULE

HARDWARE TYPE	WOOD MEMBER/POST		FASTENERS	NOTES	DETAILS
	2X4 WALL	2X6 WALL			
CS14	2X4	2X6	(13) 10d PER END	16" MIN. LAP PER END	15/S1.3
STHD14	(2)2X4	(2)2X6	(30) 12d	16" MIN. LAP PER END	14/S1.3
MST60	(2)2X4	(2)2X6	(36) 16d	--	13/S1.3
HTT5	(2)2X4	(2)2X6	(26) 0.148x3	5/8" DIA. ANCHOR BOLT	12/S1.3
HDQ8	(2)2X4	(2)2X6	(20)SDS25300 SCREWS	SSTB28 (C.I.P.)	11/S1.3

HOLDOWN & FASTENER NOTES:

1. HOLDOWNS SHALL BE AS MANUFACTURED BY THE SIMPSON STRONG-TIE COMPANY.
2. 16D = .162" DIA. X 3 1/2" LONG.
3. HTT5 ANCHOR MAY BE REPLACED WITH POST-INSTALLED ⅝" DIA. THREADED ROD EMBEDDED IN ¾" DRILLED, CLEANED HOLE x 15" DEEP WITH SIMPSON 'SET' OR 'AT' ADHESIVE (RE: TEMPERATURE LIMITS ON PRODUCT); HDU8 HOLD DOWN AND ANCHOR IS TO BE REPLACED WITH POST-INSTALLED STRAPS INSTALLED PER DETAIL 6.
4. SCREWS ARE SDS 1/4" X 2 1/2" MANUFACTURED BY SIMPSON STRONG-TIE COMPANY.
5. HOLDOWNS ANCHORS SHALL BE SECURED IN PLACE PRIOR TO PLACING CONCRETE.
6. ANCHOR BOLT NUT SHOULD BE FINGER-TIGHT PLUS 1/3 - 1/2" TURN WITH HAND WRENCH. CARE SHOULD BE TAKEN TO NOT OVER-TORQUE THE NUT. IMPACT WRENCHES SHOULD NOT BE USED.
7. HDU HOLDOWNS SHALL BE INSTALLED CENTERED ALONG THE WIDTH OF THE ATTACHED POST.
8. RE: NOTES SECTION 06100 "ROUGH FRAMING" FOR THE REQUIRED POST SPECIES AND GRADE.
9. HOLDOWNS ATTACH TO SHEARWALL END POST OR TO POST WITH STRAP ABOVE. LOCATE PER STRUCTURAL PLANS AND ARCHITECTURAL DIMENSIONS. INSTALL PER SIMPSON INSTALLATION RECOMMENDATIONS.

10 HOLDOWN & FASTENER SCHEDULE

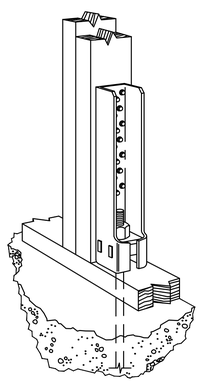

11 HDQ8 HOLD DOWN

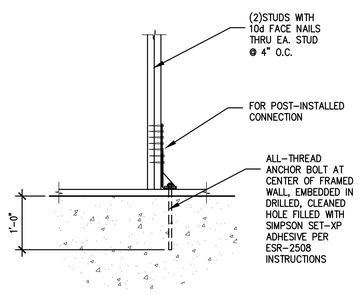

12 POST-INSTALLED HOLD DOWN

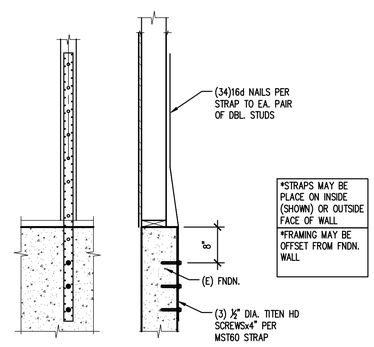

13 NEW HOLD DOWN

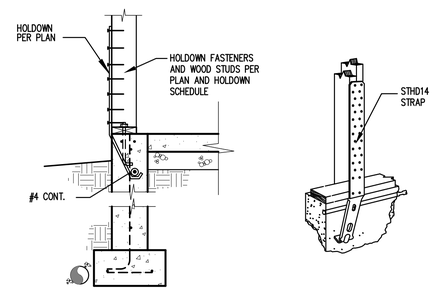

14 EXTERIOR HOLDOWN @ FOUNDATION

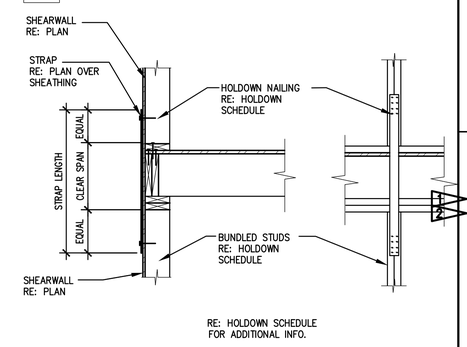

15 EXTERIOR HOLDOWN @ FLOOR

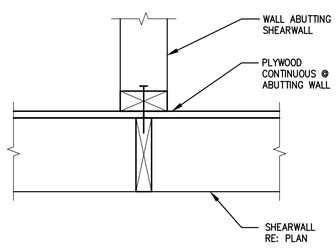

16 TYP. ABUTTING WALL

17

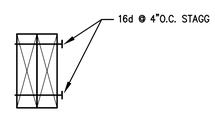

18 TYP. MULTIPLE STUD ATTACHMENT

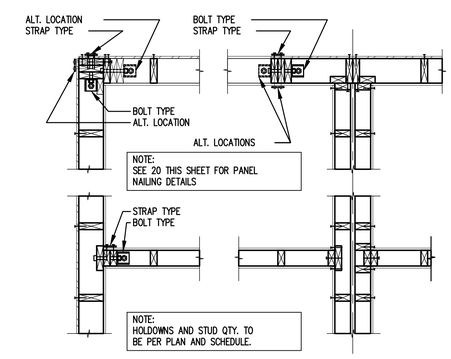

19 HOLDOWN PLACEMENTS

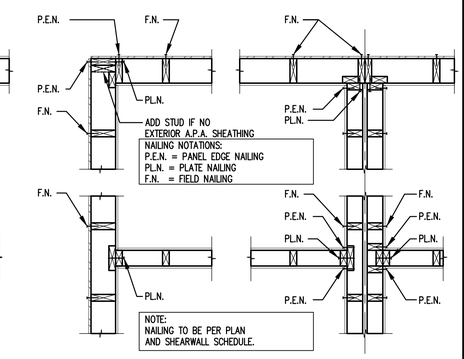

20 STRUCTURAL SHEARWALL INTERSECTIONS

CONSTRUCTION AND REMODELING

TAM CEM - RESIDENCE

Addition & Alteration

4215 Holly Ln, Mercer Island, WA 98040

Permit Set

Job # 24-028 TE# 24307

Description	Date
Permit Intake	10/07/24
Correction 01	02/04/25
Correction 02	03/06/25

Tryg·stad ENGINEERING
nels@trygstadeng.com
(208)262-6884

Permit No.: 2407-213

Drawn:

Stamp/Approval:

NELS E. TRYGSTAD STATE OF WASHINGTON 46559 REGISTERED PROFESSIONAL ENGINEER 07/26/25

Sheet Name:

HOLD DOWN SCHEDULE & NOTES

Sheet No:

S1.3

SPECIAL INSPECTIONS, TESTING and STRUCTURAL OBSERVATION SCHEDULE

GENERAL NOTE:

1. SCREENED/HALFTONE ITEMS DO NOT APPLY FOR THIS BUILDING. THEY ARE SHOWN FOR REFERENCE AS THE CODE TABLE ITEMS MAY REFERENCE TO THEM.

TABLE 1705.3 REQUIRED VERIFICATION AND INSPECTION OF CONCRETE CONSTRUCTION

	VERIFICATION AND INSPECTION	CONTINUOUS	PERIODIC	REFERENCED STANDARD	IBC REFERENCE
1.	INSPECTION OF REINFORCING STEEL, INCLUDING PRESTRESSING TENDONS AND PLACEMENT.	-	X	ACI 318: 20, 25.2, 25.3, 26.6.1-26.6.3	1908.4
2.	INSPECTION OF REINFORCING STEEL WELDING IN ACCORDANCE WITH TABLE 1705.2.2, ITEM 5b.	-	-	AWS D1.4, ACI 318: 26.6.4	-
3.	INSPECTION OF ANCHORS CAST IN CONCRETE.	-	X	ACI 318: 17.8.2	-
4.	INSPECTION OF ANCHORS POST-INSTALLED IN HARDENED CONCRETE MEMBERS.	-	X		-
	a. ADHESIVE ANCHORS INSTALLED HORIZONTALLY OR UPWARDLY INCLINED ORIENTATIONS TO RESIST SUSTAINED TENSION LOADS	X	-	ACI 318: 17.8.2.4	-
	b. MECHANICAL AND ADHESIVE ANCHORS NOT DEFINED IN 4a.	-	X	ACI 318: 17.8.2	-
5.	VERIFYING USE OF REQUIRED DESIGN MIX.	-	X	ACI 318: CH 19, 26.4.3, 26.4.4	1904.1, 1904.2, 1908.2, 1908.3
6.	PRIOR TO CONCRETE PLACEMENT, FABRICATE SPECIMENS FOR STRENGTH TESTS, PERFORM SLUMP AND AIR CONTENT TESTS, AND DETERMINE THE TEMPERATURE OF CONCRETE.	X	-	ASTM C 172, ASTM C 31, ACI 318: 26.4, 26.12	1908.10
7.	INSPECTION OF CONCRETE AND SHOTCRETE PLACEMENT FOR PROPER APPLICATION TECHNIQUES.	X	-	ACI 318: 26.5	1908.6, 1908.7, 1908.8
8.	INSPECTION FOR MAINTENANCE OF SPECIFIED CURING TEMPERATURE AND TECHNIQUES.	-	X	ACI 318: 26.5.3 - 26.5.5	1908.9
9.	INSPECTION OF PRESTRESSED CONCRETE:				
	a. APPLICATION OF PRESTRESSING FORCES.	X	-	ACI 318: 26.10	-
	b. GROUTING OF BONDED PRESTRESSING TENDONS IN THE SEISMIC-FORCE-RESISTING SYSTEM.	X	-	ACI 318: 26.10	-
10.	ERECTION OF PRECAST CONCRETE MEMBERS.	-	X	ACI 318: CH 26.8	-
11.	VERIFICATION OF IN-SITU CONCRETE STRENGTH, PRIOR TO STRESSING OF TENSONS IN POST TENSIONED CONCRETE AND PRIOR TO REMOVAL OF SHORES AND FORMS FROM BEAMS AND STRUCTURAL SLABS.	-	X	ACI 318: 26.11.2	-
12.	INSPECT FORMWORK FOR SHAPE, LOCATION AND DIMENSIONS OF THE CONCRETE MEMBER BEING FORMED.	-	X	ACI 318: 26.11.1.2(b)	-

IBC 2021 SECTION 1705.5 INSPECTIONS FOR WOOD CONSTRUCTION

		INSPECTIONS REQUIRED
1705.5		SPECIAL INSPECTIONS OF PREFABRICATED WOOD STRUCTURAL ELEMENTS AND ASSEMBLIES SHALL BE IN ACCORDANCE WITH IBC 1704.2.5
1705.5.1		HIGH-LOAD DIAPHRAGMS (ALL DESIGNATED DIAPHRAGMS PER IBC 2306.2) SHALL BE INSTALLED ACCORDING TO THE PROVISIONS OF IBC 1704.2. THE FOLLOWING SHALL BE INSPECTED:
	a.	WOOD STRUCTURAL PANEL SHEATHING - CONFIRM GRADE AND THICKNESS PER APPROVED CONSTRUCTION DOCUMENTS
	b.	VERIFY SIZE OF FRAMING MEMBERS AT ADJOINING PANEL DEGES
	c.	VERIFY NAIL OR STAPLE DIAMETER AND LENGTH
	d.	VERIFY NUMBER OF FASTENER LINES AND THE SPACING BETWEEN EACH FASTENER LINE AND AT EDGE MARGINS
1705.5.2		FOR METAL-PLATE-CONNECTED WOOD TRUSSES SPANNING 60FT OR MORE, THE SPECIAL INSPECTOR SHALL VERIFY THAT THE TEMPORARY RESTRAINT/BRACING AND PERMANENT INDIVIDUAL TRUSS MEMBER RESTRAINT/BRACING ARE INSTALLED ACCORDING TO THE APPROVED TRUSS SUBMITTAL PACKAGE
1705.12.2		SEISMIC RESISTING ELEMENTS: PERIODIC SPECIAL INSPECTION IS REQUIRED FOR NAILING, BOLTING, ANCHORING AND OTHER FASTENING OF ELEMENTS OF THE SEISMIC FORCE-RESISTING SYSTEM - INCLUDING WOOD SHEAR WALLS, WOOD DIAPHRAGMS, DRAG-STRUTS, BRACES AND HOLDOWNS - EXCEPT THAT SUCH IS NOT REQUIRED WHERE THE FASTENER SPACING IS MORE THAN 4"OC.

IBC 2021 TABLE 1705.6 REQUIRED SPECIAL INSPECTIONS AND TESTS OF SOILS

	VERIFICATION AND INSPECTION TASK	CONTINUOUS SPECIAL INSPECTION	PERIODIC SPECIAL INSPECTION
1	VERIFY MATERIALS BELOW SHALLOW FOUNDATIONS ARE ADEQUATE TO ACHIEVE THE DESIGN BEARING CAPACITY.	-	X
2	VERIFY EXCAVATIONS ARE EXTENDED TO PROPER DEPTH AND HAVE REACHED PROPER MATERIAL.	-	X
3	PERFORM CLASSIFICATION AND TESTING OF COMPACTED FILL MATERIALS.	-	X
4	VERIFY USE OF PROPER MATERIALS, DENSITIES AND LIFT THICKNESSES DURING PLACEMENT AND COMPACITON OF COMPACTED FILL.	X	-
5	PRIOR TO PLACEMENT OF COMPACTED FILL, OBSERVE SUBGRADE AND VERIFY THAT SITE HAS BEEN PREPARED PROPERLY.	-	X

OSSC 2019 SECTION 1705.12.5
REQUIRED SPECIAL INSPECTIONS of ARCHITECTURAL COMPONENTS

	VERIFICATION AND INSPECTION TASK	CONTINUOUS SPECIAL INSPECTION	PERIODIC SPECIAL INSPECTION
1	ERECTION AND FASTENING OF EXTERIOR CLADDING, INTERIOR AND EXTERIOR NONBEARING WALLS, AND EXTERIOR VENEER.	-	X

INSPECTION SCHEDULE NOTES:

1. ITEMS MARKED WITH AND "X" SHALL BE INSPECTED IN ACCORDANCE WITH IBC 1704 AND 1705 BY A CERTIFIED SPECIAL INSPECTOR FROM AN AGENCY APPROVED BY THE JURISDICTION.
2. SPECIAL INSPECTION SHALL NOT BE REQUIRED FOR WORK PERFORMED IN AN APPROVED FABRICATOR'S PER IBC 1705.2 VERIFY APPROVAL WITH JURISDICTION PRIOR TO FABRICATION.
3. CONTINUOUS SPECIAL INSPECTION REQUIRES THE INSPECTOR SHALL BE ONSITE AT ALL TIMES AND THAT WORK REQUIRING SPECIAL INSPECTION IS PERFORMED. PERIODIC SPECIAL INSPECTION SHALL ALLOW INSPECTION AT THE INTERVALS NECESSARY TO CONFORM THAT WORK REQUIRING SPECIAL INSPECTION IS IN COMPLIANCE WITH THE REQUIREMENTS.
4. ALL WELDS SHALL BE VISUALLY INSPECTED.
5. ALL COMPLETE PENETRATION WELDS SHALL BE TESTED ULTRASONICALLY.
6. PERIODIC SPECIAL INSPECTION SHALL BE ALLOWED FOR SHOP WELDING OF ASTM A706 REINFORCEMENT NO. 5 OR SMALLER USED FOR EMBEDDED ITEMS, PROVIDED THAT, THE MATERIALS AND THE QUALIFICATIONS OF WELDING PROCEDURES AND WELDERS ARE VERIFIED PRIOR TO THE START OF WORK, THAT PERIODIC INSPECTIONS ARE MADE OF WORK IN PROGRESS, AND THAT A VISUAL INSPECTION OF ALL WELDS IS MADE PRIOR TO SHIPMENT OF SHOP WELDED ITEMS.
7. STRUCTURAL OBSERVATION SHALL MEAN THE VISUAL OBSERVATION OF THE STRUCTURAL SYSTEM BY THE ENGINEER OF RECORD FOR THE GENERAL CONFORMANCE TO THE APPROVED PLANS AND SPECIFICATIONS AT SIGNIFICANT CONSTRUCTION STAGES AND AT COMPLETION OF THE STRUCTURAL FRAMING SYSTEM PRIOR TO COVER. THE CONTRACTOR SHALL PROVIDE AT LEAST TWO WORKING DAYS NOTICE TO THE ENGINEER OF RECORD PRIOR TO COVERING OF SYSTEMS REQUIRING OBSERVATION. STRUCTURAL OBSERVATION BY THE ENGINEER OF RECORD DOES NOT REPLACE OR WAVE REQUIREMENTS FOR BUILDING INSPECTION BY THE JURISDICTION NOR REQUIREMENTS FOR SPECIAL INSPECTIONS.
8. STRUCTURAL OBSERVATION FOR CONCRETE CONSTRUCTION SHALL CONSIST OF OBSERVATION AT OR NEAR THE COMPLETION OF FORMWORK, REBAR, AND PT TENDON PLACEMENT AND PRIOR TO CONCRETE PLACEMENT ON ALL PT SLABS.
9. STRUCTURAL OBSERVATION FOR WOOD CONSTRUCTION SHALL CONSIST OF OBSERVATION AT OR NEAR THE COMPLETION OF THE FIRST ELEVATED WOOD FLOOR FOR ANCHOR BOLT AND HOLDOWN INSTALLATION, SHEATHING AND STRAPPING NAILING. AND AT OR NEAR COMPLETION OF THE ROOF FRAMING PRIOR TO PLACEMENT OF THE ROOFING.
10. THE SPECIAL INSPECTOR SHALL PROVIDE THE BUILDING OFFICIAL, OWNER, ARCHITECT, ENGINEER OF RECORD, AND CONTRACTOR WITH COPIES OF ALL REPORTS AND TEST RESULTS (IBC 1704.2.4)

THE SPECIAL INSPECTOR SHALL BE A QUALIFIED PERSON EMPLOYED BY AN APPROVED AGENCY. THE SPECIAL INSPECTOR SHALL KEEP RECORDS OF INSPECTIONS AND FURNISH THEM TO THE BUILDING OFFICIAL AND THE ENGINEER OF RECORD ON A REGULAR BASIS. A FINAL REPORT DOCUMENTING REQUIRED SPECIAL INSPECTIONS AND THE CORRECTION OF ANY DISCREPANCIES SHALL BE PROVIDED PRIOR TO COMPLETION OF BUILDING FINISHES. WHERE FABRICATION OF STRUCTURAL COMPONENTS AND ASSEMBLES IS BEING PERFORMED ON THE PREMISES OF A FABRICATOR'S SHOP, SPECIAL INSPECTION OF THE FABRICATED ITEMS SHALL BE REQUIRED EXCEPT WHERE THE FABRICATOR IS REGISTERED AND APPROVED TO DO SUCH WORK WITHOUT SPECIAL INSPECTION IN ACCORDANCE WITH IBC SECTION 1704.2.2. PERIODIC INSPECTION ALLOWS INSPECTION AT INTERVALS NECESSARY TO CONFIRM THAT WORK REQUIRING SPECIAL INSPECTION IS IN COMPLIANCE WITH REQUIREMENTS. CONTINUOUS SPECIAL INSPECTION REQUIRES THAT THE INSPECTOR BE ONSITE AT ALL TIMES THAT WORK REQUIRING SPECIAL INSPECTION IS PERFORMED.

TABLE 1705.2 REQUIRED VERIFICATION AND INSPECTION OF STEEL CONSTRUCTION

VERIFICATION AND INSPECTION	CONTINUOUS	PERIODIC	REFERENCED STANDARD (a)
1. MATERIAL VERIFICATION OF HIGH-STRENGTH BOLTS, NUTS, AND WASHERS.			
a. IDENTIFICATION MARKINGS CONFORMING TO ASTM STANDARDS AND SPECIFIED IN THE APPROVED CONSTRUCTION DOCUMENTS	--	X	AISC 360, SECTION A3.3 AND APPLICABLE ASTM MATERIAL STANDARDS
b. MANUFACTURERS CERTIFICATE OF COMPLIANCE REQUIRED	--	X	--
2. INSPECTION OF HIGH STRENGTH BOLTING			
a. SNUG TIGHT JOINTS	--	X	AISC 360 SECTION M2.5
b. PRESTENSIONED AND SLIP CRITICAL JOINTS USING TURN-OF-NUT WITH MATCHMARKING, TWIST-OFF BOLT OR DIRECT TENSION INDICATOR METHODS OF INSTALLATION	--	X	
c. PRESTENSIONED AND SLIP CRITICAL JOINTS USING TURN-OF-NUT WITHOUT MATCHMARKING, TWIST-OFF BOLT OR DIRECT TENSION INDICATOR METHODS OF INSTALLATION	X	--	
3. MATERIAL VERIFICATION OF STRUCTURAL STEEL			
a. FOR STRUCTURAL STEEL, IDENTIFICATION MARKINGS TO CONFORM TO AISC 360	--	X	AISC 360, SECTION N2.1
b. FOR OTHER STEEL, IDENTIFICATION MARKINGS TO CONFORM TO CONFORM TO ASTM STANDARDS SPECIFIED IN THE APPROVED CONSTRUCTION DOCUMENTS	--	X	APPLICABLE ASTM MATERIAL STANDARDS
c. MANUFACTURER'S CERTIFIED TEST REPORTS	--	X	--
4. MATERIAL VERIFICATION OF COLD FORMED STEEL DECK			
c. MANUFACTURER'S CERTIFIED TEST REPORTS	--	X	--
5. MATERIAL VERIFICATION OF WELD FILLER MATERIALS			
a. IDENTIFICATION MARKINGS TO CONFORM TO CONFORM TO AWS STANDARD SPECIFICATION IN THE APPROVED CONSTRUCTION DOCUMENTS	--	X	AISC 360, SECTION A3.5 AND APPLICABLE AWS A5 DOCUMANTS
c. MANUFACTURER'S CERTIFICATION OF COMPLIANCE REQUIRED	--	X	--
6. INSPECTION OF WELDING			
a. STRUCTURAL STEEL AND COLD FORMED STEEL DECK			
1. COMPLETE AND PARTIAL PENETRATION GROOVE WELDS	X	--	AWS D1.1
2. MULTIPLE PASS FILLET WELDS	X	--	
3. SINGLE PASS FILLET WELDS > 5/16"	X	--	
4. PLUG AND SLOT WELDS	X	--	
5. SINGLE PASS FILLET WELDS < 5/16"	--	X	
6. FLOOR AND ROOF DECK WELDS			AWS D1.3
b. REINFORCING STEEL			
1. VERIFICATION OF WELDABILITY OF REINFORCING STEEL OTHER THAN ASTM A706	--	X	AWS D1.4, ACI 318 SECTION 4.2.2
2. REINFORCING STEEL RESISTING FLEXURAL AND AXIAL FORCES OF INTERMEDIATE AND SPECIAL MOMENT FRAMES, AND BOUNDARY ELEMENTS OF SPECIAL STRUCTURAL WALLS OF CONCRETE AND SHEAR REINFORCMENT	X	--	
3. SHEAR REINFORCEMENT	X	--	
4. OTHER REINFORCING STEEL	--	X	
7. INSPECTION OF STEEL FRAME JOINT DETAILS FOR COMPLIANCE			
a. DETAILS SUCH AS BRACING AND STIFFENING	--	X	--
b. MEMBER LOCATION	--	X	
c. APPLICATION OF JOINT DETAILS AT EACH SECTION	--	X	

a. WHERE APPLICABLE, SEE ALSO SECTION 1705.12, SPECIAL INSPECTIONS FOR SEISMIC RESISTANCE

CONSTRUCTION AND REMODELING

TAM CEM - RESIDENCE
Addition & Alteration
4215 Holly Ln, Mercer Island, WA 98040

Permit Set

Job # 24-028 TE# 24307

Description	Date
Permit Intake	10/07/24
Correction 01	02/04/25
Correction 02	03/06/25

Tryg·stad ENGINEERING
nels@trygstadeng.com
(208)262-6884

Permit No.: 2407-213

Drawn:
Stamp/Approval:

Sheet Name:

SPECIAL INSPECTION TABLES

Sheet No:

S1.4

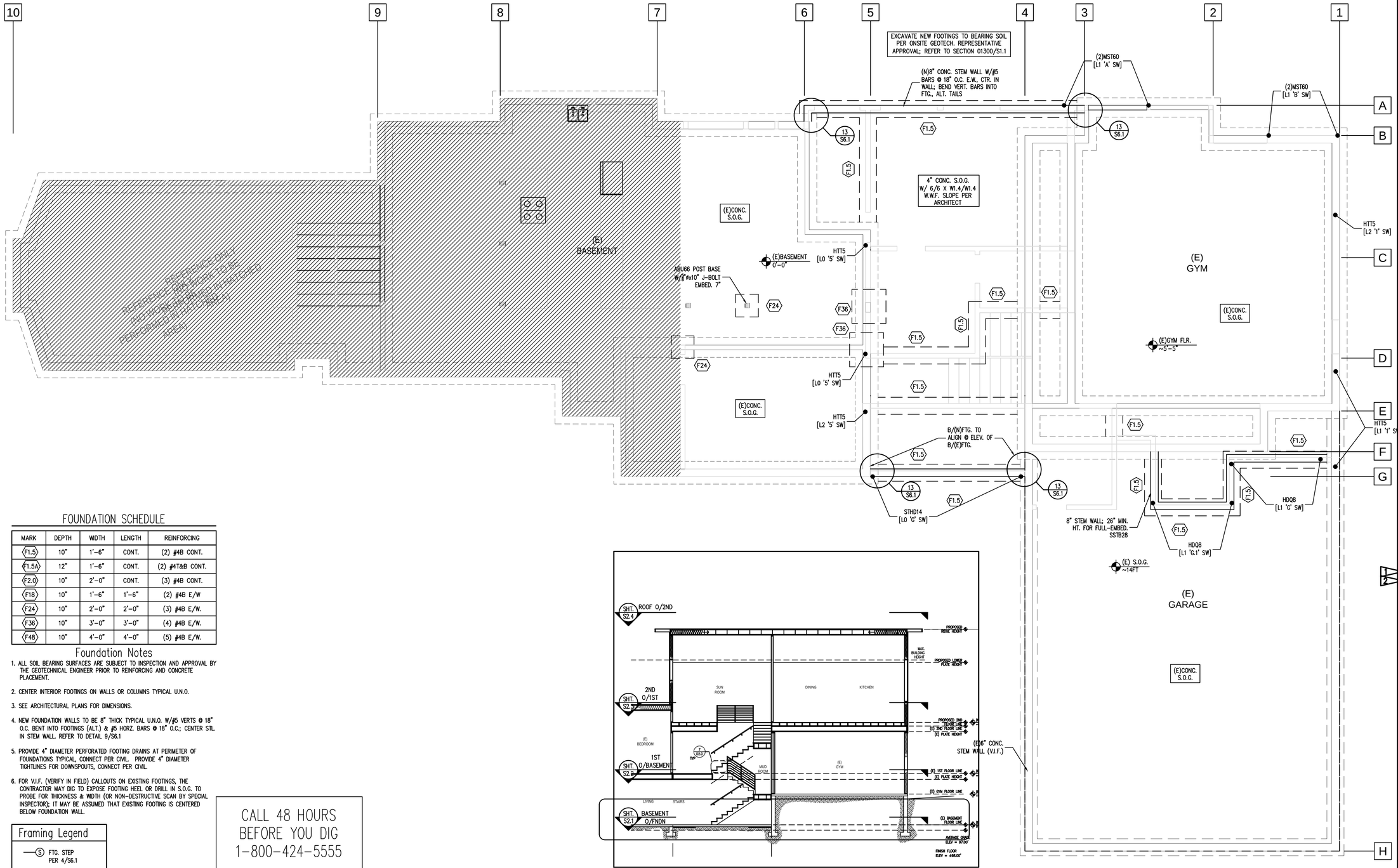

FOUNDATION SCHEDULE

MARK	DEPTH	WIDTH	LENGTH	REINFORCING
F1.5	10"	1'-6"	CONT.	(2) #4B CONT.
F1.5A	12"	1'-6"	CONT.	(2) #4T&B CONT.
F2.0	10"	2'-0"	CONT.	(3) #4B CONT.
F18	10"	1'-6"	1'-6"	(2) #4B E/W
F24	10"	2'-0"	2'-0"	(3) #4B E/W.
F36	10"	3'-0"	3'-0"	(4) #4B E/W.
F48	10"	4'-0"	4'-0"	(5) #4B E/W.

Foundation Notes

1. ALL SOIL BEARING SURFACES ARE SUBJECT TO INSPECTION AND APPROVAL BY THE GEOTECHNICAL ENGINEER PRIOR TO REINFORCING AND CONCRETE PLACEMENT.
2. CENTER INTERIOR FOOTINGS ON WALLS OR COLUMNS TYPICAL U.N.O.
3. SEE ARCHITECTURAL PLANS FOR DIMENSIONS.
4. NEW FOUNDATION WALLS TO BE 8" THICK TYPICAL U.N.O. W/#5 VERTS @ 18" O.C. BENT INTO FOOTINGS (ALT.) & #5 HORZ. BARS @ 18" O.C.; CENTER STL. IN STEM WALL. REFER TO DETAIL 9/S6.1
5. PROVIDE 4" DIAMETER PERFORATED FOOTING DRAINS AT PERIMETER OF FOUNDATIONS TYPICAL, CONNECT PER CIVIL. PROVIDE 4" DIAMETER TIGHTLINES FOR DOWNSPOUTS, CONNECT PER CIVIL.
6. FOR V.I.F. (VERIFY IN FIELD) CALLOUTS ON EXISTING FOOTINGS, THE CONTRACTOR MAY DIG TO EXPOSE FOOTING HEEL OR DRILL IN S.O.G. TO PROBE FOR THICKNESS & WIDTH (OR NON-DESTRUCTIVE SCAN BY SPECIAL INSPECTOR); IT MAY BE ASSUMED THAT EXISTING FOOTING IS CENTERED BELOW FOUNDATION WALL.

Framing Legend

—(S) FTG. STEP PER 4/S6.1

CALL 48 HOURS BEFORE YOU DIG 1-800-424-5555

Note:
PLANS PREPARED USING ARCHITECTURAL BACKGROUNDS RECEIVED 07/10/2024

Floor Level Elevation Keyplan

SCALE: 1/8" = 1'-0"

GRAPHIC SCALE
-4 0 2 4 8
(IN FEET)
1 inch = 4 ft.

Foundation Plan

SCALE: 1/4" = 1'-0"

PROJECT NORTH (REFERENCE ONLY)

CONSTRUCTION AND REMODELING

TAM CEM - RESIDENCE

Addition & Alteration
4215 Holly Ln, Mercer Island, WA 98040

Permit Set

Job # 24-028 TE# 24307

Description	Date
Permit Intake	10/07/24
Correction 01	02/04/25
Correction 02	03/06/25

Tryg·stad ENGINEERING
nels@trygstadeng.com
(208)262-6884

Permit No.: 2407-213

Drawn:
Stamp/Approval:

NELS P. TRYGSTAD STATE OF WASHINGTON 46592 PROFESSIONAL ENGINEER REGISTERED 02/06/25 REVISED 11/25/25

Sheet Name:

FOUNDATION PLAN

Sheet No:

S2.1

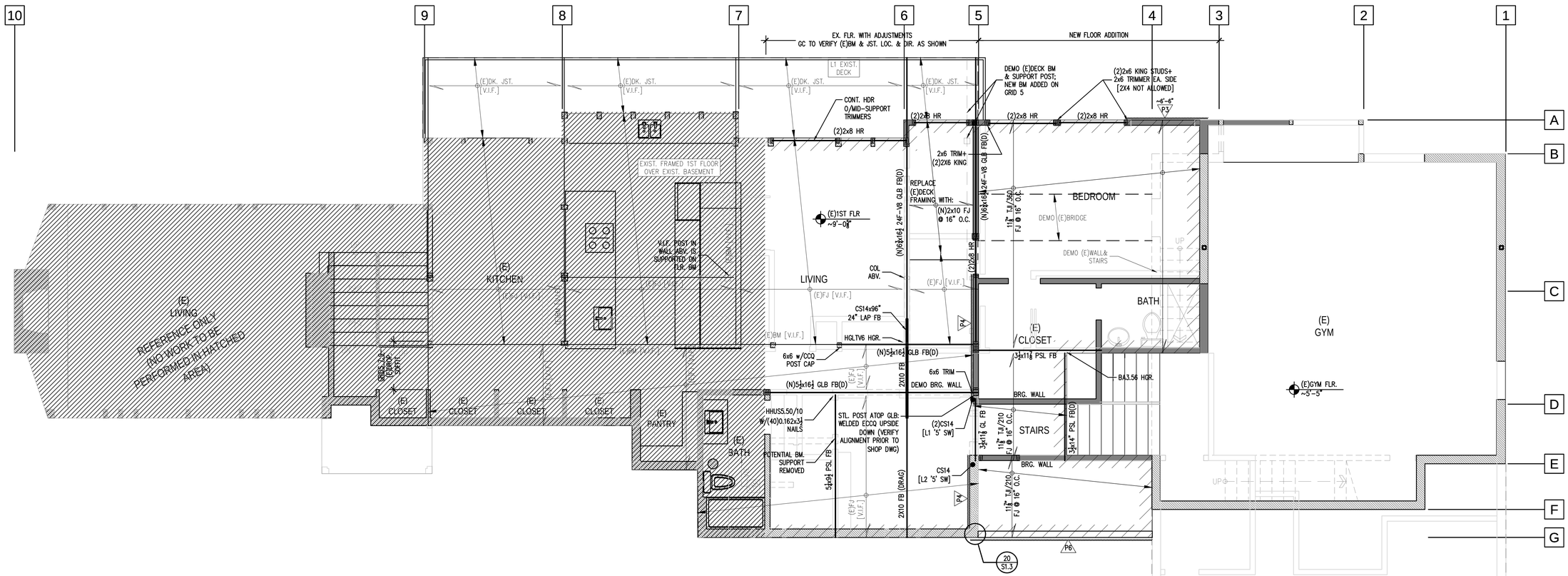

Framing Notes

1. REFER TO S9.1 FOR TYPICAL FRAMING DETAILS
2. ROOF FRAMING – PREMANUFACTURED TRUSSES (PMT) OR RAFTERS PER PLAN. 2x4 ON-EDGE OUTRIGGERS (O.R.) @ 24" O.C.
3. FLOOR FRAMING – TJI JOISTS PER PLAN. BLOCKING AT BEARING AND SHEARWALLS SHALL BE PER BEARING AND SHEARWALL SCHEDULE (VERIFY EXIST. BRG. LOC.). FLOOR SHEATHING SHALL BE GLUED AND NAILED.
4. WALLS INDICATED ARE BELOW THE FRAMING LEVEL (REFER TO SYMBOL KEY FOR TYPE). SEE BEARING WALL SCHEDULE THIS SHEET
5. PLUMBING, MECHANICAL, AND ELECTRICAL SYSTEMS SHALL BE DESIGNED AND BUILT TO ACCOMMODATE 3/8" PER FLOOR WOOD SHRINKAGE.
6. SEE DETAIL 1/S9.1 FOR TYPICAL HEADER/BUNDLED STUD CONSTRUCTION.
7. SEE ARCHITECTURAL FOR DRAFTSTOP AND VENTING LOCATIONS.
8. FRAMING MEMBERS AND SHEATHING SHALL BE PER STRUCTURAL NOTES AS NOTED ON SHEET S1.1
9. ALL UNLABELED EXTERIOR WALLS ARE TO BE TYPE 'P6'; SEE SHEARWALL SCHEDULE ON SHEET S1.2
10. HANGERS INDICATED ARE AS MANUFACTURED BY SIMPSON STRONG-TIE. SEE SEC. 06103/S1.1 FOR TYPICAL HANGERS, U.N.O..
11. PROVIDE JOIST OR BLOCKING ATOP SHEARWALLS.
12. SEE ARCHITECTURAL DRAWINGS FOR DIMENSIONS AND TOP PLATE ELEVATIONS.
13. BUNDLED STUDS FROM THIS LEVEL SHALL BE CONTINUED DOWN TO FOUNDATION OR SUPPORTING BEAM. (RE: 4/S9.1)
14. ALL BEAMS AND HEADERS SHALL HAVE A MINIMUM OF (1) FULL HEIGHT STUD AT EACH END FOR BRACING TYPICAL UNLESS NOTED OTHERWISE.
15. PROVIDE MINIMUM (2) 2X BUNDLED STUDS UNDER EACH BEAM END, TYPICAL UNLESS NOTED OTHERWISE. (AT HEADERS: TRIMMER+KING=2 BUNDLED STUDS)
16. SEE DETAILS 19 & 20 ON SHEET S1.3 FOR TYPICAL CORNER FRAMING DETAILS AT HOLD DOWNS & SHEARWALLS..
17. HANGER OCCURS WHERE FLUSH BEAM HANGS TO SUPPORT BEAMS, TYP. U.N.O.

Bearing Wall Stud Schedule

BEARING WALL TYPE	STUD SIZE AND SPACING, U.N.O.
EXTERIOR	2 X 6 AT 16" O.C., U.N.O.
INTERIOR NON-BEARING	2 X 4 AT 16 O.C.

BEARING WALL NOTES

1. SEE SHEARWALL SCHEDULE SHEET S1.2 FOR WALL SHEATHING, ADDITIONAL PLATE AND STUD REQUIREMENTS, BLOCKING AND PLATE NAILING. SEE SAWN LUMBER STRUCTURAL NOTES SHEET S1.1 FOR SPECIES AND GRADE OF WALL PLATES AND STUDS.
2. SECURE SILL PLATES TO CONCRETE WITH ⅝" DIA. ANCHOR BOLTS AT 48" ON CENTER TYPICAL UNLESS NOTED OTHERWISE. RE:S1.2. REFER TO SHEARWALL AND HOLDOWN SCHEDULE FOR ADDITIONAL ANCHOR BOLT REQUIREMENTS. WHERE PRESERVATIVE TREATED WOOD IS USED, REFER TO THAT NOTE SECTION FOR CORROSION PROTECTION REQUIREMENTS FOR CONNECTORS.
3. SEE 2/S9.1 FOR TOP PLATE SPLICE. PROVIDE ADDITIONAL CONNECTORS AT SHEARWALLS AS INDICATED ON THE PLANS.
4. ALIGN STUDS UNDER JOISTS

Framing Legend

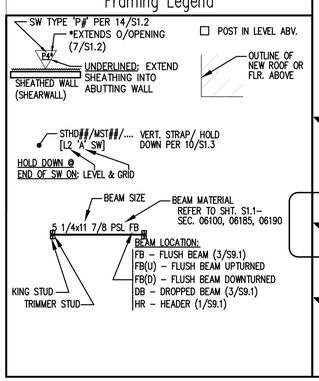

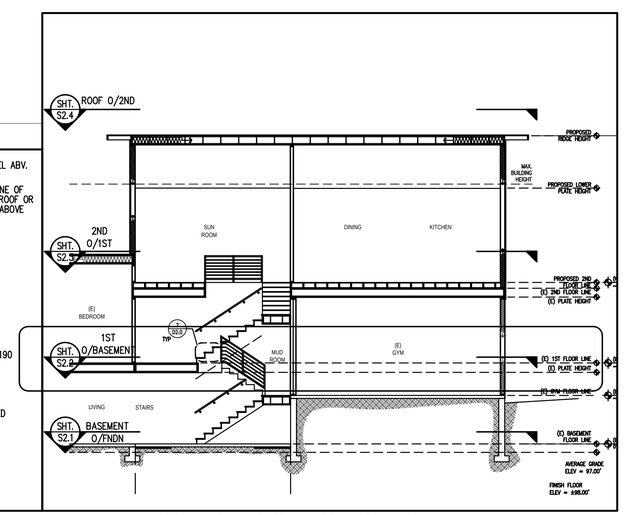

Floor Level Elevation Keyplan

SCALE: 1/8" = 1'-0"

GRAPHIC SCALE

−4 0 2 4 8

(IN FEET)
1 inch = 4 ft.

Main Floor Framing Plan

SCALE: 1/4" = 1'-0"

PROJECT NORTH
(REFERENCE ONLY)

Note:

PLANS PREPARED USING ARCHITECTURAL BACKGROUNDS RECEIVED 07/10/2024

CONSTRUCTION AND REMODELING

TAM CEM - RESIDENCE

Addition & Alteration
4215 Holly Ln, Mercer Island, WA 98040

Permit Set

Job # 24-028 TE# 24307

Description	Date
Permit Intake	10/07/24
Correction 01	02/04/25
Correction 02	03/06/25

Tryg·stad ENGINEERING
nels@trygstadeng.com
(208)262-6884

Permit No.: 2407-213

Drawn:
Stamp/Approval:

Sheet Name:

MAIN FLOOR FRAMING PLAN

Sheet No:

S2.2

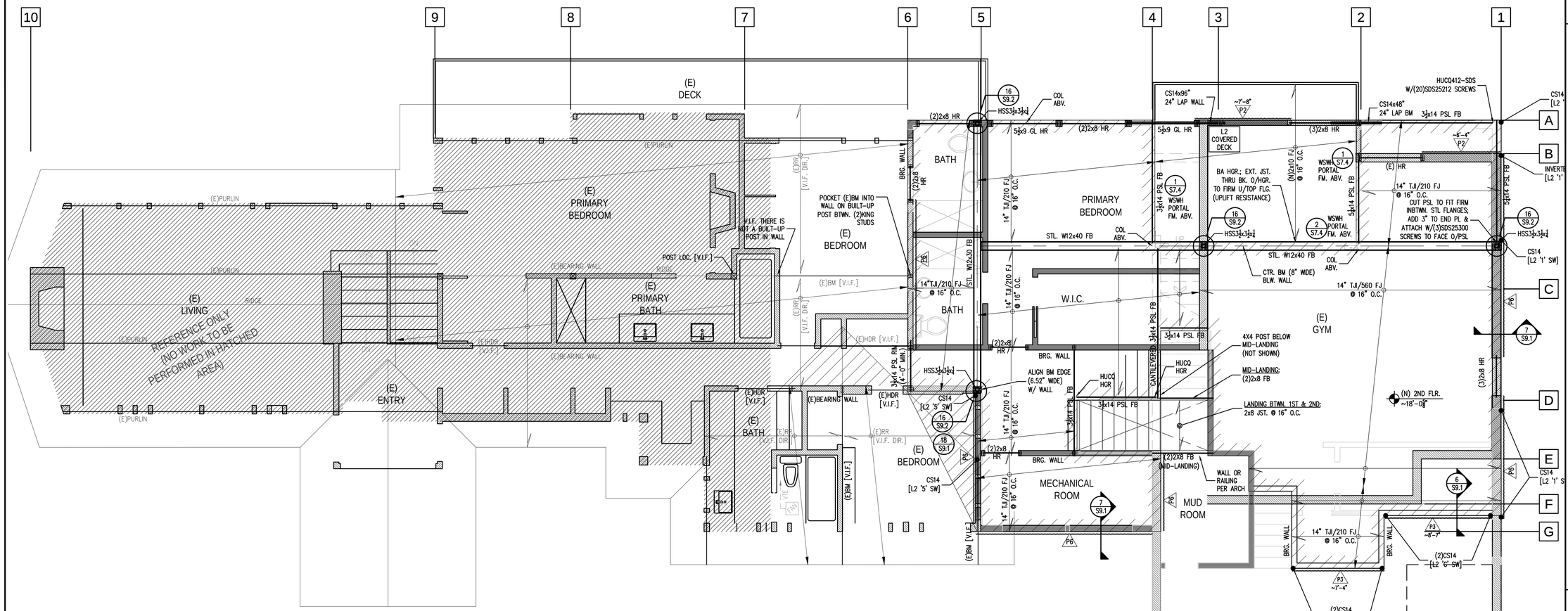

Framing Notes

1. REFER TO S9.1 FOR TYPICAL FRAMING DETAILS
2. ROOF FRAMING – PREMANUFACTURED TRUSSES (PMT) OR RAFTERS PER PLAN. 2x4 ON-EDGE OUTRIGGERS (O.R.) @ 24" O.C.
3. FLOOR FRAMING – TJI JOISTS PER PLAN. BLOCKING AT BEARING AND SHEARWALLS SHALL BE PER BEARING AND SHEARWALL SCHEDULE (VERIFY EXIST. BRG. LOC.). FLOOR SHEATHING SHALL BE GLUED AND NAILED.
4. WALLS INDICATED ARE BELOW THE FRAMING LEVEL (REFER TO SYMBOL KEY FOR TYPE). SEE BEARING WALL SCHEDULE THIS SHEET
5. PLUMBING, MECHANICAL, AND ELECTRICAL SYSTEMS SHALL BE DESIGNED AND BUILT TO ACCOMMODATE 3/8" PER FLOOR WOOD SHRINKAGE.
6. SEE DETAIL 1/S9.1 FOR TYPICAL HEADER/BUNDLED STUD CONSTRUCTION.
7. SEE ARCHITECTURAL FOR DRAFTSTOP AND VENTING LOCATIONS.
8. FRAMING MEMBERS AND SHEATHING SHALL BE PER STRUCTURAL NOTES AS NOTED ON SHEET S1.1
9. ALL UNLABELED EXTERIOR WALLS ARE TO BE TYPE 'P6'; SEE SHEARWALL SCHEDULE ON SHEET S1.2
10. HANGERS INDICATED ARE AS MANUFACTURED BY SIMPSON STRONG-TIE. SEE SEC. 06103/S1.1 FOR TYPICAL HANGERS, U.N.O..
11. PROVIDE JOIST OR BLOCKING ATOP SHEARWALLS.
12. SEE ARCHITECTURAL DRAWINGS FOR DIMENSIONS AND TOP PLATE ELEVATIONS.
13. BUNDLED STUDS FROM THIS LEVEL SHALL BE CONTINUED DOWN TO FOUNDATION OR SUPPORTING BEAM. (RE: 4/S9.1)
14. ALL BEAMS AND HEADERS SHALL HAVE A MINIMUM OF (1) FULL HEIGHT STUD AT EACH END FOR BRACING TYPICAL UNLESS NOTED OTHERWISE.
15. PROVIDE MINIMUM (2) 2X BUNDLED STUDS UNDER EACH BEAM END, TYPICAL UNLESS NOTED OTHERWISE. (AT HEADERS: TRIMMER+KING=2 BUNDLED STUDS)
16. SEE DETAILS 19 & 20 ON SHEET S1.3 FOR TYPICAL CORNER FRAMING DETAILS AT HOLD DOWNS & SHEARWALLS..
17. HANGER OCCURS WHERE FLUSH BEAM HANGS TO SUPPORT BEAMS, TYP. U.N.O.

Bearing Wall Stud Schedule

BEARING WALL TYPE	STUD SIZE AND SPACING, U.N.O.
EXTERIOR	2 X 6 AT 16" O.C., U.N.O.
INTERIOR NON-BEARING	2 X 4 AT 16 O.C.

BEARING WALL NOTES

1. SEE SHEARWALL SCHEDULE SHEET S1.2 FOR WALL SHEATHING, ADDITIONAL PLATE AND STUD REQUIREMENTS, BLOCKING AND PLATE NAILING. SEE SAWN LUMBER STRUCTURAL NOTES SHEET S1.1 FOR SPECIES AND GRADE OF WALL PLATES AND STUDS.
2. SECURE SILL PLATES TO CONCRETE WITH 5/8" DIA. ANCHOR BOLTS AT 48" ON CENTER TYPICAL UNLESS NOTED OTHERWISE. RE:S1.2. REFER TO SHEARWALL AND HOLDOWN SCHEDULE FOR ADDITIONAL ANCHOR BOLT REQUIREMENTS. WHERE PRESERVATIVE TREATED WOOD IS USED, REFER TO THAT NOTE SECTION FOR CORROSION PROTECTION REQUIREMENTS FOR CONNECTORS.
3. SEE 2/S9.1 FOR TOP PLATE SPLICE. PROVIDE ADDITIONAL CONNECTORS AT SHEARWALLS AS INDICATED ON THE PLANS.
4. ALIGN STUDS UNDER JOISTS

Framing Legend

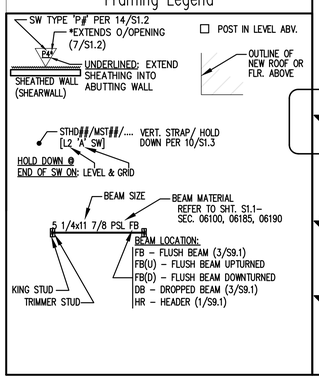

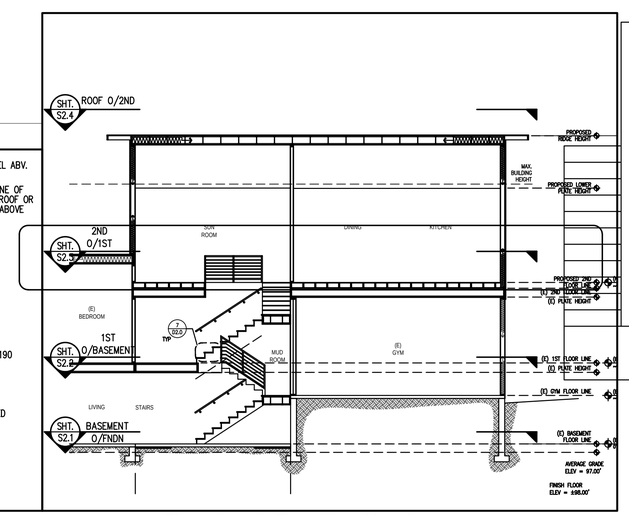

Floor Level Elevation Keyplan

SCALE: 1/8" = 1'-0"

GRAPHIC SCALE

–4 0 2 4 8

(IN FEET)
1 inch = 4 ft.

Second Floor Framing Plan

SCALE: 1/4" = 1'-0"

PROJECT NORTH (REFERENCE ONLY)

Note:
PLANS PREPARED USING ARCHITECTURAL BACKGROUNDS RECEIVED 07/10/2024

CONSTRUCTION AND REMODELING

TAM CEM - RESIDENCE

Addition & Alteration
4215 Holly Ln, Mercer Island, WA 98040

Permit Set

Job # 24-028 TE# 24307

Description	Date
Permit Intake	10/07/24
Correction 01	02/04/25
Correction 02	03/06/25

Tryg·stad ENGINEERING
nels@trygstadeng.com
(208)262-6884

Permit No.: 2407-213

Drawn:
Stamp/Approval:

Sheet Name:
SECOND FLOOR FRAMING PLAN

Sheet No:
S2.3

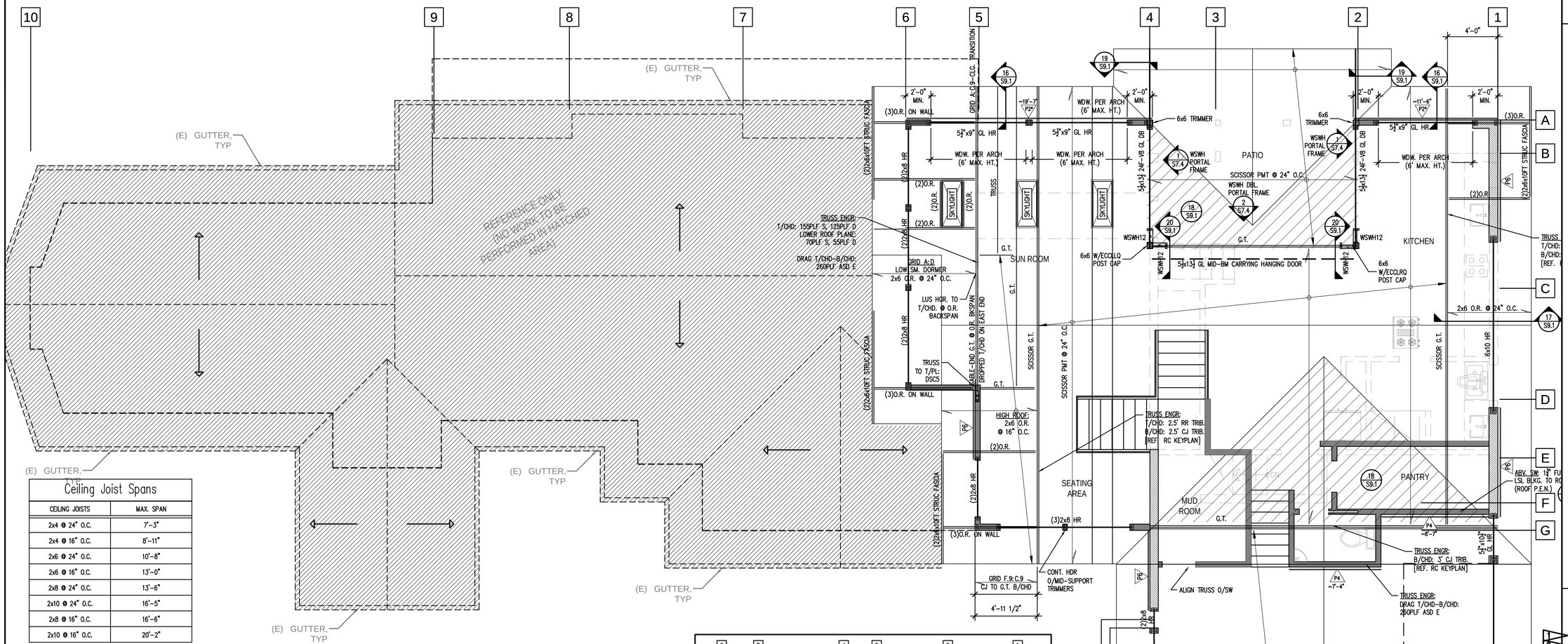

Ceiling Joist Spans

CEILING JOISTS	MAX. SPAN
2x4 @ 24" O.C.	7'–3"
2x4 @ 16" O.C.	8'–11"
2x6 @ 24" O.C.	10'–8"
2x6 @ 16" O.C.	13'–0"
2x8 @ 24" O.C.	13'–6"
2x10 @ 24" O.C.	16'–5"
2x8 @ 16" O.C.	16'–6"
2x10 @ 16" O.C.	20'–2"

CEILING JOISTS NOTES:
1. SIZE & SPAN BASED ON UNIHABITABLE ATTIC WITH LIMITED STORAGE (20PSF LL) + 10psf DL , L/DELTA=240 PER IRC TABLE R802.5.12)
2. USE DF–L#2 JOISTS

Framing Notes

1. REFER TO S9.1 FOR TYPICAL FRAMING DETAILS
2. ROOF FRAMING – PREMANUFACTURED TRUSSES (PMT) OR RAFTERS PER PLAN. 2x4 ON–EDGE OUTRIGGERS (O.R.) @ 24" O.C.
3. FLOOR FRAMING – TJI JOISTS PER PLAN. BLOCKING AT BEARING AND SHEARWALLS SHALL BE PER BEARING AND SHEARWALL SCHEDULE (VERIFY EXIST. BRG. LOC.). FLOOR SHEATHING SHALL BE GLUED AND NAILED.
4. WALLS INDICATED ARE BELOW THE FRAMING LEVEL (REFER TO SYMBOL KEY FOR TYPE). SEE BEARING WALL SCHEDULE THIS SHEET
5. PLUMBING, MECHANICAL, AND ELECTRICAL SYSTEMS SHALL BE DESIGNED AND BUILT TO ACCOMMODATE 3/8" PER FLOOR WOOD SHRINKAGE.
6. SEE DETAIL 1/S9.1 FOR TYPICAL HEADER/BUNDLED STUD CONSTRUCTION.
7. SEE ARCHITECTURAL FOR DRAFTSTOP AND VENTING LOCATIONS.
8. FRAMING MEMBERS AND SHEATHING SHALL BE PER STRUCTURAL NOTES AS NOTED ON SHEET S1.1
9. ALL UNLABELED EXTERIOR WALLS ARE TO BE TYPE 'P6'; SEE SHEARWALL SCHEDULE ON SHEET S1.2
10. HANGERS INDICATED ARE AS MANUFACTURED BY SIMPSON STRONG–TIE. SEE SEC. 06103/S1.1 FOR TYPICAL HANGERS, U.N.O..
11. PROVIDE JOIST OR BLOCKING ATOP SHEARWALLS.
12. SEE ARCHITECTURAL DRAWINGS FOR DIMENSIONS AND TOP PLATE ELEVATIONS.
13. BUNDLED STUDS FROM THIS LEVEL SHALL BE CONTINUED DOWN TO FOUNDATION OR SUPPORTING BEAM. (RE: 4/S9.1)
14. ALL BEAMS AND HEADERS SHALL HAVE A MINIMUM OF (1) FULL HEIGHT STUD AT EACH END FOR BRACING TYPICAL UNLESS NOTED OTHERWISE.
15. PROVIDE MINIMUM (2) 2X BUNDLED STUDS UNDER EACH BEAM END, TYPICAL UNLESS NOTED OTHERWISE. (AT HEADERS: TRIMMER+KING=2 BUNDLED STUDS)
16. SEE DETAILS 19 & 20 ON SHEET S1.3 FOR TYPICAL CORNER FRAMING DETAILS AT HOLD DOWNS & SHEARWALLS..
17. HANGER OCCURS WHERE FLUSH BEAM HANGS TO SUPPORT BEAMS, TYP. U.N.O.

Bearing Wall Stud Schedule

BEARING WALL TYPE	STUD SIZE AND SPACING, U.N.O.
EXTERIOR	2 X 6 AT 16" O.C., U.N.O.
INTERIOR NON–BEARING	2 X 4 AT 16 O.C.

BEARING WALL NOTES
1. SEE SHEARWALL SCHEDULE SHEET S1.2 FOR WALL SHEATHING, ADDITIONAL PLATE AND STUD REQUIREMENTS, BLOCKING AND PLATE NAILING. SEE SAWN LUMBER STRUCTURAL NOTES SHEET S1.1 FOR SPECIES AND GRADE OF WALL PLATES AND STUDS.
2. SECURE SILL PLATES TO CONCRETE WITH ⅝" DIA. ANCHOR BOLTS AT 48" ON CENTER TYPICAL UNLESS NOTED OTHERWISE. RE:S1.2. REFER TO SHEARWALL AND HOLDOWN SCHEDULE FOR ADDITIONAL ANCHOR BOLT REQUIREMENTS. WHERE PRESERVATIVE TREATED WOOD IS USED, REFER TO THAT NOTE SECTION FOR CORROSION PROTECTION REQUIREMENTS FOR CONNECTORS.
3. SEE 2/S9.1 FOR TOP PLATE SPLICE. PROVIDE ADDITIONAL CONNECTORS AT SHEARWALLS AS INDICATED ON THE PLANS.
4. ALIGN STUDS UNDER JOISTS

Framing Legend

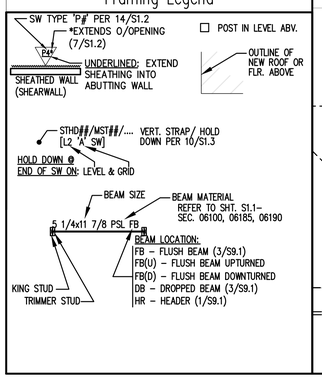

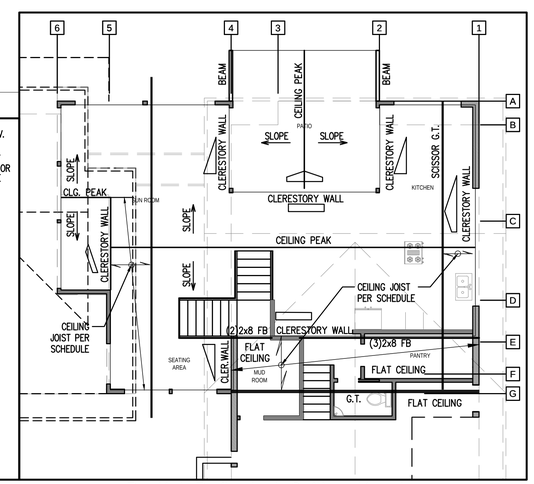

Partial Reflected Ceiling Keyplan

SCALE: 1/8" = 1'–0"

GRAPHIC SCALE
–4 0 2 4 8
(IN FEET)
1 inch = 4 ft.

Roof Framing Plan

SCALE: 1/4" = 1'–0"

PROJECT NORTH (REFERENCE ONLY)

Note:
PLANS PREPARED USING ARCHITECTURAL BACKGROUNDS RECEIVED 07/10/2024

CONSTRUCTION AND REMODELING

TAM CEM - RESIDENCE

Addition & Alteration
4215 Holly Ln, Mercer Island, WA 98040

Permit Set

Job # 24-028 TE# 24307

Description	Date
Permit Intake	10/07/24
Correction 01	02/04/25
Correction 02	03/06/25

Tryg·stad ENGINEERING
nels@trygstadeng.com
(208)262-6884

Permit No.: 2407-213

Drawn:
Stamp/Approval:

Sheet Name:
ROOF FRAMING PLAN

Sheet No:
S2.4

BAR SIZE	LAP CLASS	F'c = 3000PSI		F'c = 4000PSI		F'c = 5000PSI	
		TOP BARS	OTHER BARS	TOP BARS	OTHER BARS	TOP BARS	OTHER BARS
#3	A	17	14	15	12	14	12
	B	23	17	20	15	18	14
#4	A	23	18	20	16	18	14
	B	30	23	26	20	23	18
#5	A	29	22	25	19	22	17
	B	37	29	32	25	29	22
#6	A	35	27	30	23	27	21
	B	45	35	39	30	35	27
#7	A	63	48	54	42	49	37
	B	81	63	70	54	63	49
#8	A	72	55	62	48	55	43
	B	93	72	80	62	72	55
#9	A	81	62	70	54	63	48
	B	105	81	91	70	81	63

1. LENGTHS SHOWN ARE IN INCHES.
2. TENSION LAP SPLICES SHALL BE CLASS B UNLESS ONE HALF OR LESS OF THE TOTAL REINFORCEMENT IS SPLICED WITHIN THE REQUIRED LAP LENGTH.
3. TOP BARS ARE HORIZONTAL BARS WITH MORE THAN 12" OF CONCRETE CAST BELOW THE BARS.
4. TENSION LAP SPLICE SHOWN ABOVE ARE FOR CONCRETE COVER GREATER THAN OR EQUAL TO BAR DIAMETER AND CENTER TO CENTER SPACING GREATER THAN TWO BAR DIAMETERS (SPACING AND COVER CASE 1).
5. INCREASE LAP SPLICE LENGTH BY 1.5 FOR EPOXY COATED REINFORCEMENT.
6. INCREASE LAP SPLICE LENGTH BY 1.3 FOR LIGHT WEIGHT CONCRETE.
7. COMPRESSION LAP SPLICES SHALL BE A MINIMUM OF 30 BAR DIAMETERS UNLESS OTHERWISE SHOWN ON THE DRAWINGS.

1 LAP SPLICE SCHEDULE

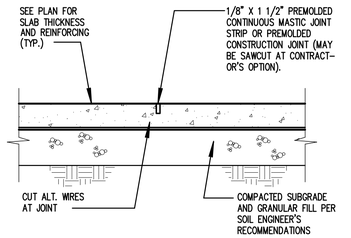

PROVIDE CONTROL OR CONSTRUCTION JOINTS IN SLABS ON GRADE TO BREAK UP SLAB INTO RECTANGULAR AREAS OF 400 SQUARE FEET OR LESS. AREAS TO BE APPROX. SQUARE AND HAVE NO ACUTE ANGLES. JOINT LOCATIONS TO BE APPROVED BY THE ARCHITECT.

2 TYPICAL CONTROL JOINT

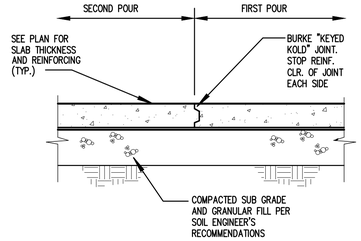

PROVIDE CONTROL OR CONSTRUCTION JOINTS IN SLABS ON GRADE TO BREAK UP SLAB INTO RECTANGULAR AREAS OF 400 SQUARE FEET OR LESS. AREAS TO BE APPROX. SQUARE AND HAVE NO ACUTE ANGLES. JOINT LOCATIONS TO BE APPROVED BY THE ARCHITECT.

3 TYPICAL CONSTRUCTION JOINT

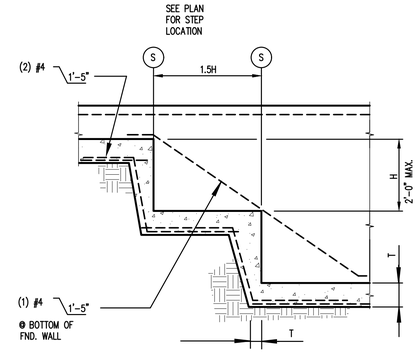

4 TYPICAL STEPPED FOOTING

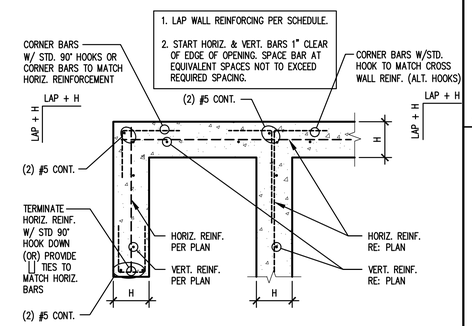

5 SGL. CURTAIN WALL REINF. PLACEMENT

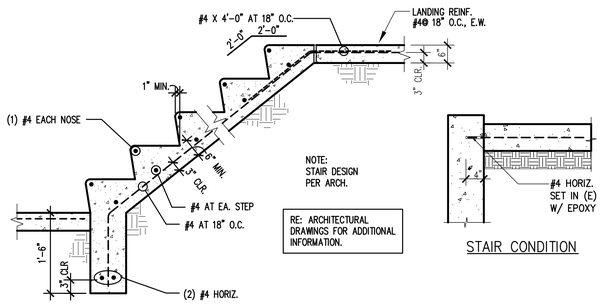

6 CONCRETE STAIRS ON GROUND

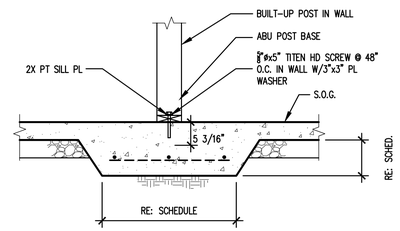

8 TYPICAL INTERIOR POST ON SLAB

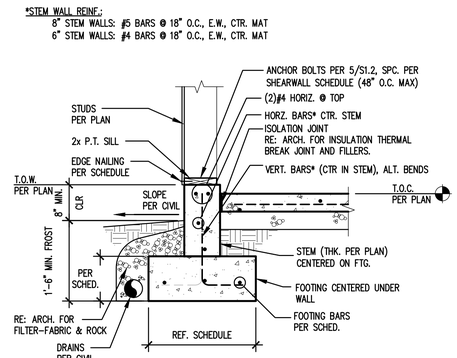

9 TYPICAL EXTERIOR FOOTING

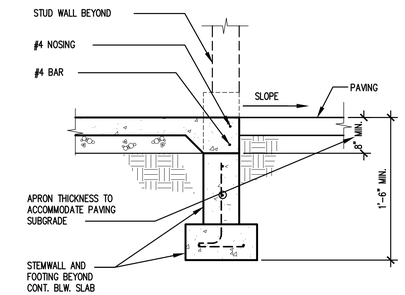

10 GARAGE APRON

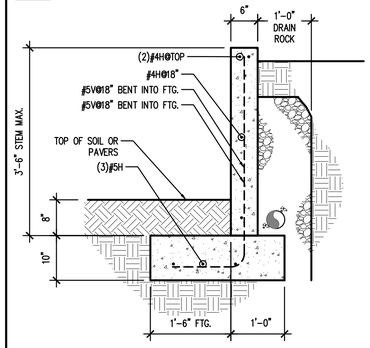

11 RETAINING WALL

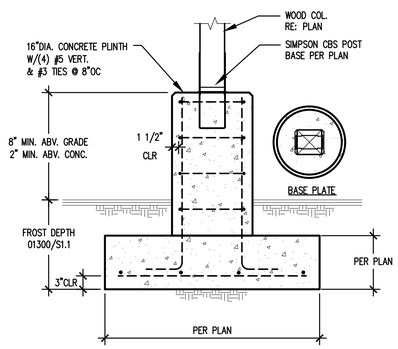

12 TYP. WOOD COL. ON CONC. PLINTH

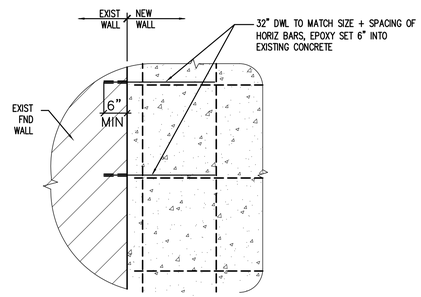

13 NEW FOUNDATION TO EXIST. FND CONN.

CONSTRUCTION AND REMODELING

TAM CEM - RESIDENCE

Addition & Alteration
4215 Holly Ln, Mercer Island, WA 98040

Permit Set

Job # 24-028 TE# 24307

Description	Date
Permit Intake	10/07/24
Correction 01	02/04/25
Correction 02	03/06/25

Tryg·stad ENGINEERING
nels@trygstadeng.com
(208)262-6884

Permit No.: 2407-213

Drawn:
Stamp/Approval:

Sheet Name:
FOUNDATION DETAILS

Sheet No:
S6.1

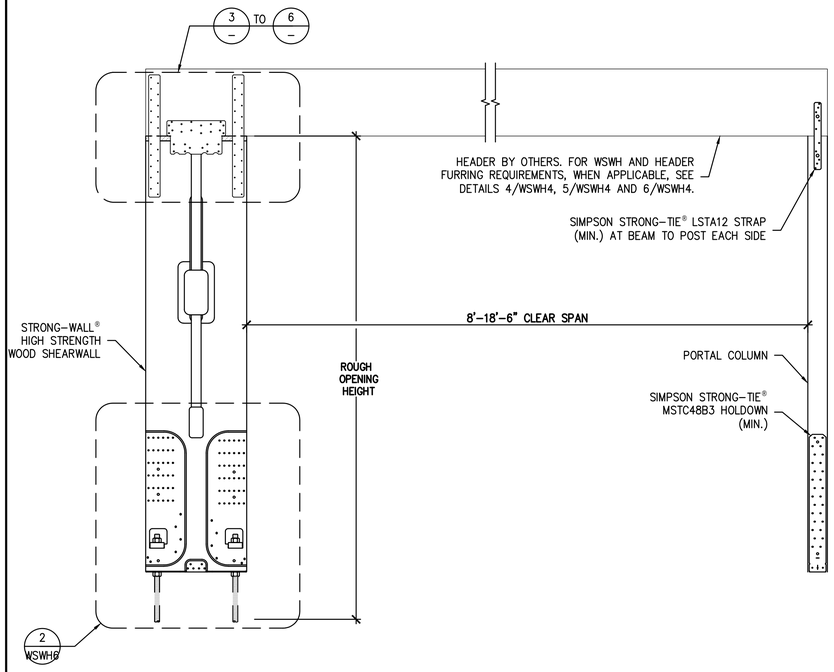

GARAGE HEADER ROUGH OPENING HEIGHT			
MODEL NO.	TRIMMED PANEL HEIGHT	H CURB	ROUGH OPENING HEIGHT
WSWH12x7 WSWH18x7 WSWH24x7	78"	5½"	6'-11½"
		6"	7'-0"
WSWH12x8 WSWH18x8 WSWH24x8	85½"	0"	7'-1½"
	93¼"	5½"	8'-2¾"
		6"	8'-3¼"

NOTES :
1. IF REQUIRED ROUGH OPENING HEIGHT EXCEEDS TABLE VALUE, SPECIFY NEXT TALLER PANEL AND TRIM AS NECESSARY. THE STRONG-WALL® HIGH STRENGTH WOOD SHEARWALL MAY BE TRIMMED TO A MINIMUM HEIGHT OF 74½".
2. FURRING DOWN GARAGE HEADER MAY BE REQUIRED FOR CORRECT ROUGH OPENING HEIGHT.

ENSURE CONCRETE IS LEVEL AND SMOOTH BENEATH PANEL. GRIND OR FILL AS NECESSARY.

1 STRONG-WALL® HIGH STRENGTH WOOD SHEARWALL SINGLE PORTAL ASSEMBLY

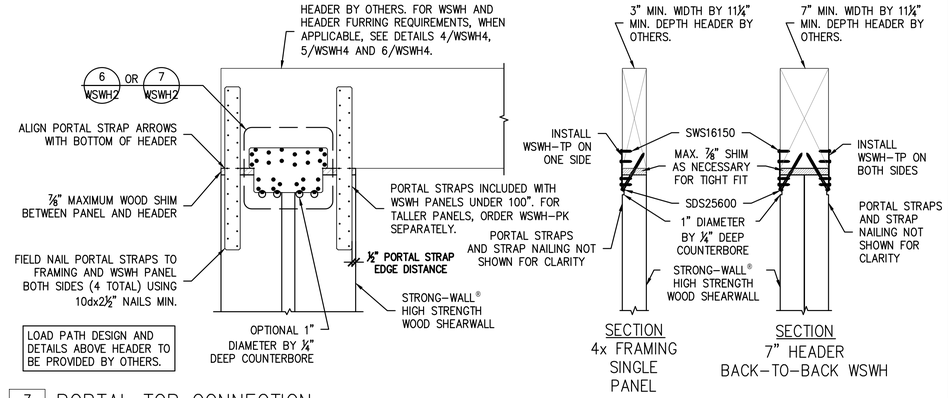

3 PORTAL TOP CONNECTION

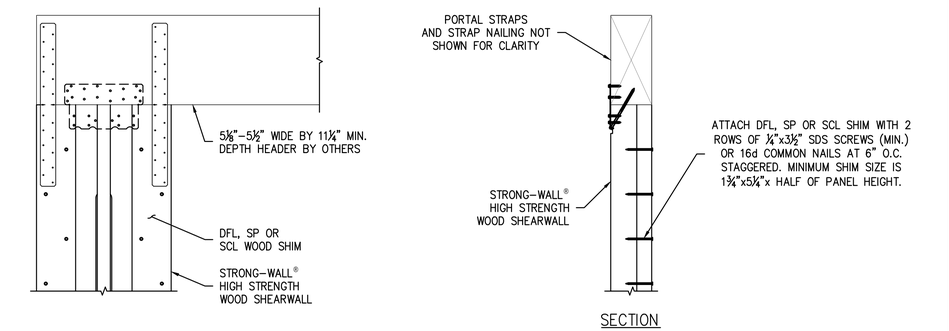

4 FURRING FOR 5⅛" TO 5½" HEADER

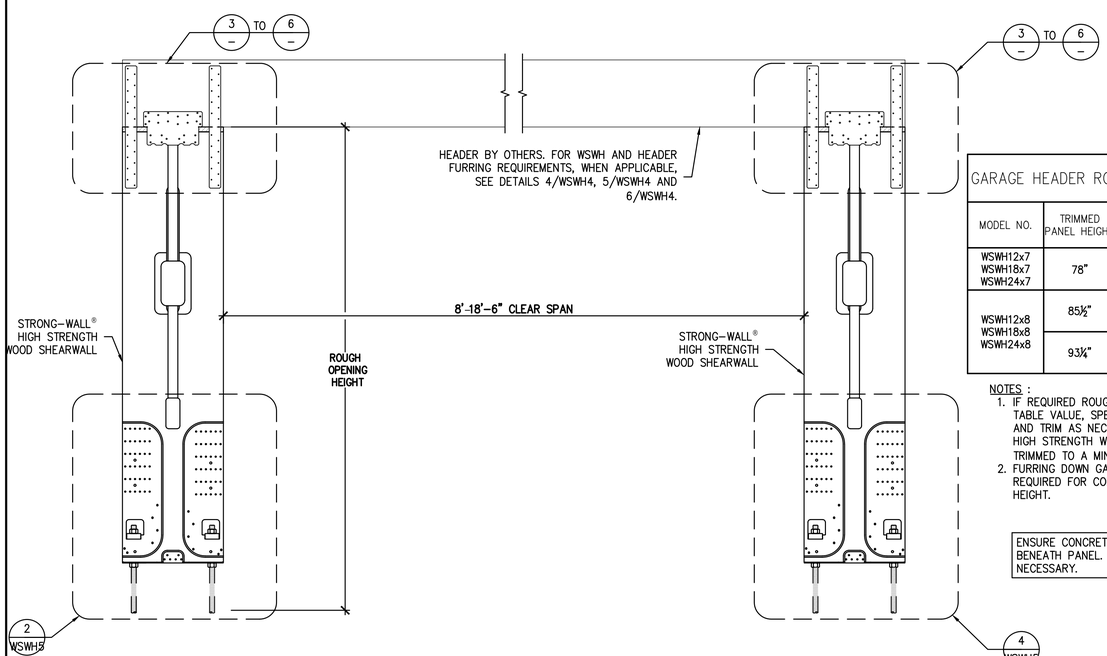

GARAGE HEADER ROUGH OPENING HEIGHT			
MODEL NO.	TRIMMED PANEL HEIGHT	H CURB	ROUGH OPENING HEIGHT
WSWH12x7 WSWH18x7 WSWH24x7	78"	5½"	6'-11½"
		6"	7'-0"
WSWH12x8 WSWH18x8 WSWH24x8	85½"	0"	7'-1½"
	93¼"	5½"	8'-2¾"
		6"	8'-3¼"

NOTES :
1. IF REQUIRED ROUGH OPENING HEIGHT EXCEEDS TABLE VALUE, SPECIFY NEXT TALLER PANEL AND TRIM AS NECESSARY. THE STRONG-WALL® HIGH STRENGTH WOOD SHEARWALL MAY BE TRIMMED TO A MINIMUM HEIGHT OF 74½".
2. FURRING DOWN GARAGE HEADER MAY BE REQUIRED FOR CORRECT ROUGH OPENING HEIGHT.

ENSURE CONCRETE IS LEVEL AND SMOOTH BENEATH PANEL. GRIND OR FILL AS NECESSARY.

2 STRONG-WALL® HIGH STRENGTH WOOD SHEARWALL DOUBLE PORTAL ASSEMBLY

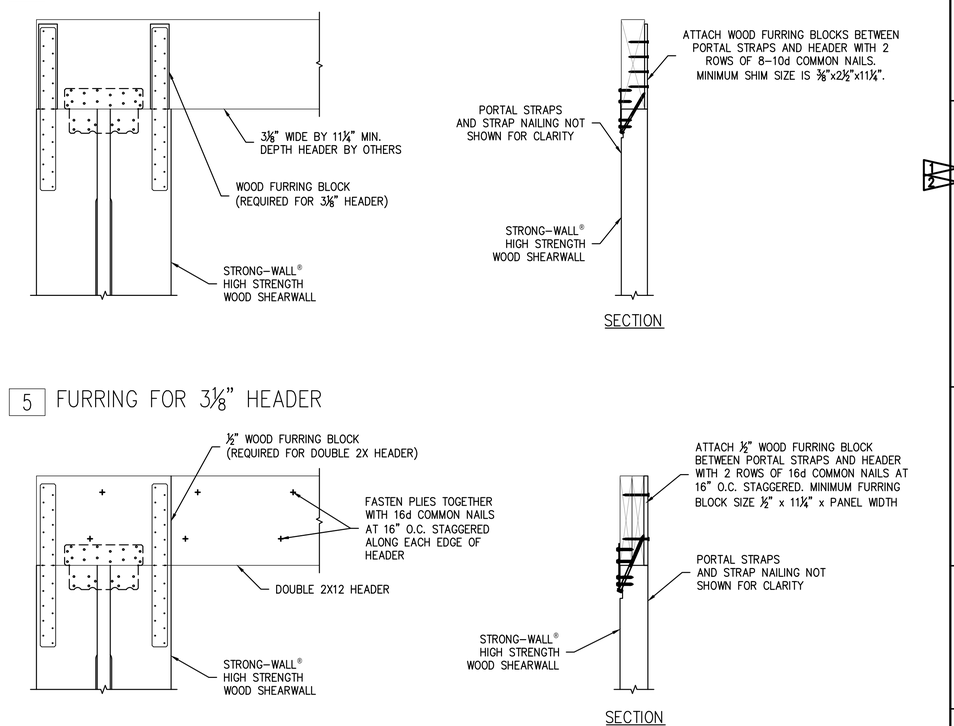

5 FURRING FOR 3⅛" HEADER

6 FURRING FOR DOUBLE 2X12 HEADERS

CONSTRUCTION AND REMODELING

TAM CEM - RESIDENCE

Addition & Alteration
4215 Holly Ln, Mercer Island, WA 98040

Permit Set

Job # 24-028 TE# 24307

Description	Date
Permit Intake	10/07/24
Correction 01	02/04/25
Correction 02	03/06/25

Tryg-stad ENGINEERING
nels@trygstadeng.com
(208)262-6884

Permit No.: 2407-213

Drawn:
Stamp/Approval:

Sheet Name:
SHT. WSWH4 STRONGWALL FRAMING DETAILS

Sheet No:
S7.4

STRONG–WALL® HIGH STRENGTH WOOD SHEARWALL MODELS

MODEL NO.	W (in.)	H (in.)	ANCHOR BOLTS		TOTAL WALL WEIGHT (lb.)
			QUANTITY	DIA. (in.)	
WSWH12x7	12	84	2	1	105
WSWH18x7	18	84	2	1	155
WSWH12x8	12	96	2	1	120
WSWH18x8	18	96	2	1	175
WSWH24x8	24	96	2	1	225
WSWH12x9	12	108	2	1	130
WSWH18x9	18	108	2	1	195
WSWH24x9	24	108	2	1	250
WSWH12x10	12	120	2	1	145
WSWH18x10	18	120	2	1	210
WSWH24x10	24	120	2	1	275
WSWH12x12	12	144	2	1	165
WSWH18x12	18	144	2	1	245
WSWH24x12	24	144	2	1	325
WSWH18x14	18	168	2	1	285
WSWH24x14	24	168	2	1	370
WSWH24x16	24	192	2	1	420
WSWH18x20	18	240	2	1	390
WSWH24x20	24	240	2	1	520

NOTES :
1. FOR HEIGHTS NOT LISTED, ORDER THE NEXT TALLEST PANEL AND TRIM TO FIT. MINIMUM TRIMMED HEIGHT FOR ALL PANELS IS 74½".
2. ALL PANELS COME WITH PRE–ATTACHED HOLDOWNS, TWO HEAVY HEX NUTS, TWO HEAVY BEARING PLATES, ONE WSWH–TP TOP CONNECTION PLATE WITH REQUIRED FASTENERS AND INSTALLATION INSTRUCTIONS.
3. ALL PANELS ARE 3½" THICK.

1 STRONG–WALL® WSWH MODELS

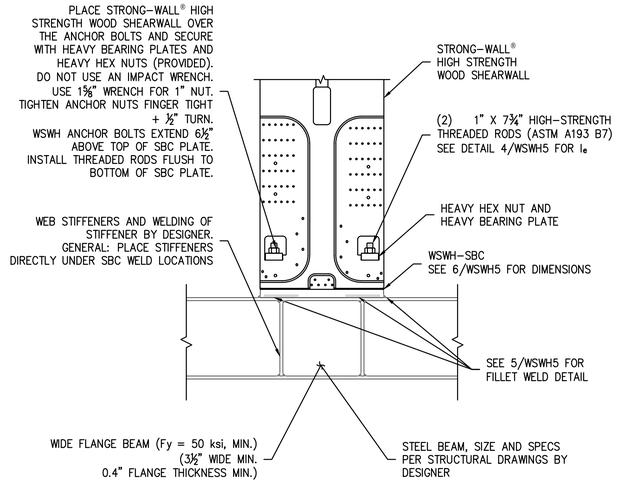

DESIGNER IS PERMITTED TO MODIFY DETAILS FOR SPECIFIC CONDITIONS.

3 WSWH ON STEEL BEAM BASE CONNECTION

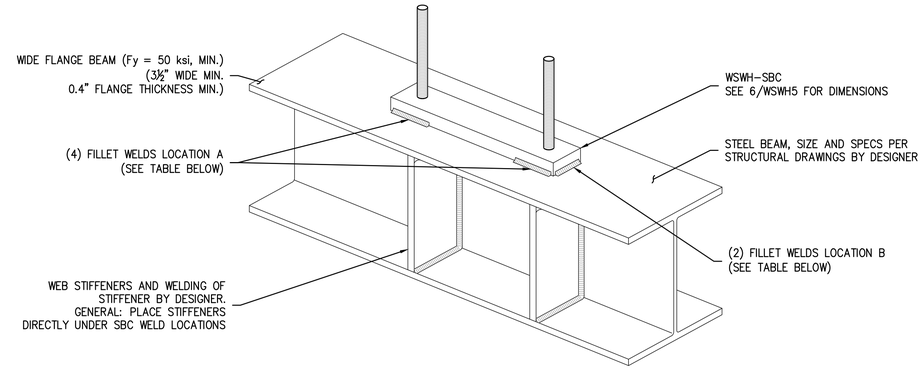

WSWH – LAP JOINT FILLET WELD DETAIL

WALL MODEL	SBC PLATE MODEL	FILLET WELD SIZE (in.) x LENGTH (in.)		TOTAL WELD LENGTH (in.)
		LOCATION A	LOCATION B	
WSWH12	WSWH–SBC12–PL	5/16 x 4	5/16 x 3	22
WSWH18	WSWH–SBC18–PL	7/16 x 5	7/16 x 3	26
WSWH24	WSWH–SBC24–PL	7/16 x 5	7/16 x 3	26

NOTES :
1. TOTAL WELD LENGTH REFERS TO THE LENGTH OF THE WELD FOR BOTH SIDES OF THE WALL.

5 WSWH ON STEEL BEAM FILLET WELD DETAIL

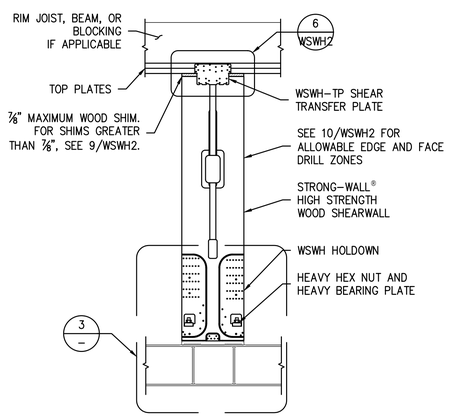

DESIGNER IS PERMITTED TO MODIFY DETAILS FOR SPECIFIC CONDITIONS.

2 SINGLE STORY WSWH ON STEEL BEAM

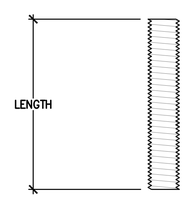

WSWH PANEL MODEL	MODEL NO.	DIAMETER	LENGTH
WSWH12, WSWH18 AND WSWH24	WSWHAB1X7.75" HS	1"	7¾"

4 WSWH ON STEEL BEAM ANCHOR BOLTS

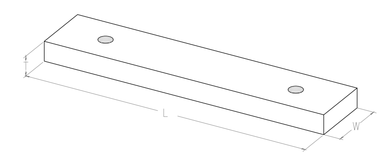

WSWH–TO–STEEL–BEAM CONNECTOR (SBC)

WALL MODEL	SBC PLATE MODEL	SBC PLATE SIZE		
		LENGTH, L (in.)	WIDTH, W(in.)	THICKNESS, T (in.)
WSWH12	WSWH–SBC12–PL	12⅛	3½	1¼
WSWH18	WSWH–SBC18–PL	18	3½	1¼
WSWH24	WSWH–SBC24–PL	24	3½	1¼

NOTES :
1. TOTAL WELD LENGTH REFERS TO THE LENGTH OF THE WELD FOR BOTH SIDES OF THE WALL.

6 WSWH ON STEEL BEAM CONNECTOR (SBC)

WALL MODEL	WSWH STEEL BEAM CONNECTOR KIT MODEL	CONTENTS
WSWH12	WSWH–SBC12KT	(1) WSWH–SBC PLATE (2) 1"x7¾" THREADED RODS (ASTM A193 B7)
WSWH18	WSWH–SBC18KT	
WSWH24	WSWH–SBC24KT	

NOTES :
1. TWO HEAVY HEX NUTS AND TWO HEAVY BEARING PLATES ARE INCLUDED WITH EACH WALL.

7 WSWH STEEL BEAM CONNECTION KIT

CONSTRUCTION AND REMODELING

TAM CEM - RESIDENCE
Addition & Alteration
4215 Holly Ln, Mercer Island, WA 98040

Permit Set

Job # 24-028 TE# 24307

Description	Date
Permit Intake	10/07/24
1 Correction 01	02/04/25
2 Correction 02	03/06/25

Tryg·stad ENGINEERING
nels@trygstadeng.com
(208)262-6884

Permit No.: 2407-213

Drawn:
Stamp/Approval:

Sheet Name:
SHT. WSWH5 STRONGWALL FRAMING DETAILS

Sheet No:
S7.5

STRONG-WALL® HIGH STRENGTH WOOD SHEARWALL MODELS

MODEL NO.	W (in.)	H (in.)	ANCHOR BOLTS		TOTAL WALL WEIGHT (lb.)
			QUANTITY	DIA. (in.)	
WSWH12x7	12	84	2	1	105
WSWH18x7	18	84	2	1	155
WSWH12x8	12	96	2	1	120
WSWH18x8	18	96	2	1	175
WSWH24x8	24	96	2	1	225
WSWH12x9	12	108	2	1	130
WSWH18x9	18	108	2	1	195
WSWH24x9	24	108	2	1	250
WSWH12x10	12	120	2	1	145
WSWH18x10	18	120	2	1	210
WSWH24x10	24	120	2	1	275
WSWH12x12	12	144	2	1	165
WSWH18x12	18	144	2	1	245
WSWH24x12	24	144	2	1	325
WSWH18x14	18	168	2	1	285
WSWH24x14	24	168	2	1	370
WSWH24x16	24	192	2	1	420
WSWH18x20	18	240	2	1	390
WSWH24x20	24	240	2	1	520

NOTES :
1. FOR HEIGHTS NOT LISTED, ORDER THE NEXT TALLEST PANEL AND TRIM TO FIT. MINIMUM TRIMMED HEIGHT FOR ALL PANELS IS 74½".
2. ALL PANELS COME WITH PRE-ATTACHED HOLDOWNS, TWO HEAVY HEX NUTS, TWO HEAVY BEARING PLATES, ONE WSWH-TP TOP CONNECTION PLATE WITH REQUIRED FASTENERS AND INSTALLATION INSTRUCTIONS.
3. ALL PANELS ARE 3½" THICK.

1 STRONG-WALL® WSWH MODELS

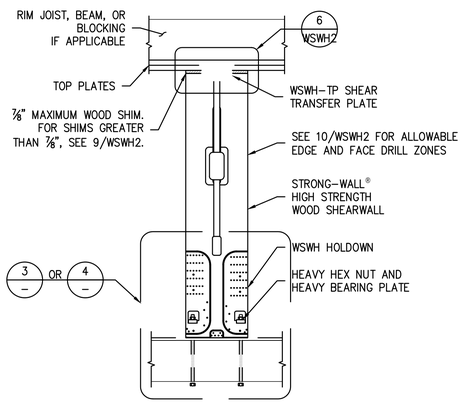

DESIGNER IS PERMITTED TO MODIFY DETAILS FOR SPECIFIC CONDITIONS.

2 SINGLE STORY WSWH ON WOOD BEAM

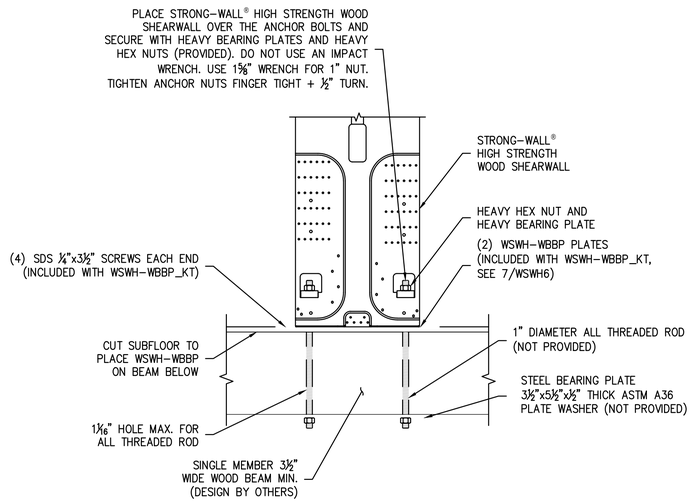

DESIGNER IS PERMITTED TO MODIFY DETAILS FOR SPECIFIC CONDITIONS.

3 WSWH ON WOOD BEAM CONNECTION

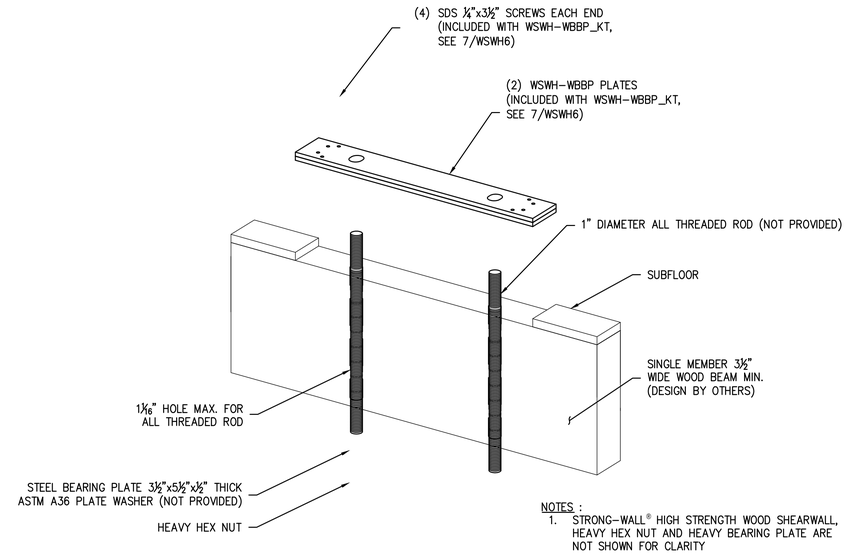

NOTES :
1. STRONG-WALL® HIGH STRENGTH WOOD SHEARWALL, HEAVY HEX NUT AND HEAVY BEARING PLATE ARE NOT SHOWN FOR CLARITY

5 WSWH WOOD BEAM CONNECTION DETAIL – PERSPECTIVE VIEW

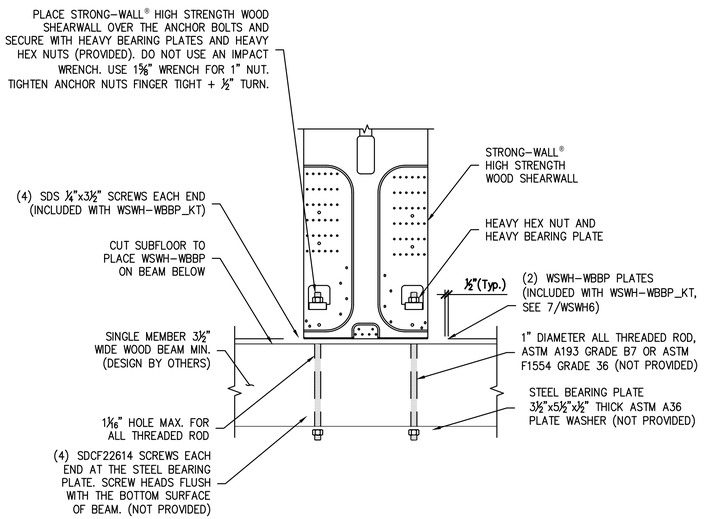

4 WSWH ON WOOD BEAM CONNECTION WITH SDCF SCREWS

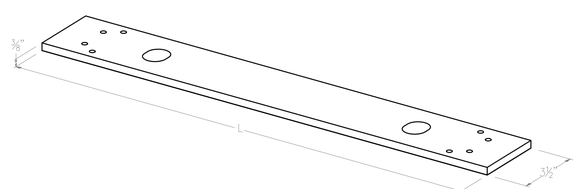

WSWH WOOD BEAM BASE PLATE (WBBP)

WALL MODEL	WSWH-WBBP KIT MODEL	LENGTH, L (in.)
WSWH12	WSWH-WBBP12KT	18
WSWH18	WSWH-WBBP18KT	24
WSWH24	WSWH-WBBP24KT	30

NOTES :
1. WSWH-WBBP KIT INCLUDES (2) 3/8" THICK WSWH-WBBP PLATES AND (8) SDS ¼" X 3½" SCREWS REQUIRED FOR INSTALLATION. TWO HEAVY HEX NUTS AND TWO HEAVY BEARING PLATES ARE INCLUDED WITH EACH WALL.

7 **WSWH** WOOD BEAM BASE PLATE (WBBP)

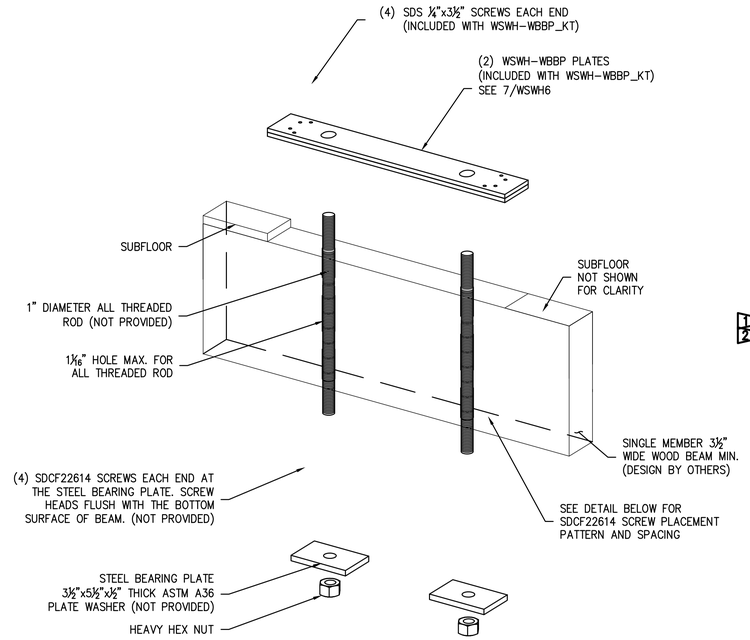

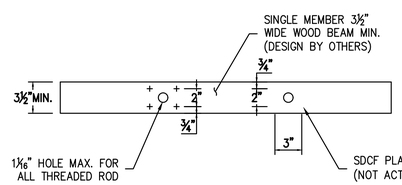

NOTES :
1. STRONG-WALL® HIGH STRENGTH WOOD SHEARWALL, HEAVY HEX NUT AND HEAVY BEARING PLATE ARE NOT SHOWN FOR CLARITY

SDCF22614 SCREW PLACEMENT PATTERN AT UNDERSIDE OF BEAM

6 WSWH WOOD BEAM CONNECTION WITH SDCF SCREWS – PERSPECTIVE VIEW

CONSTRUCTION AND REMODELING

TAM CEM - RESIDENCE

Addition & Alteration
4215 Holly Ln, Mercer Island, WA 98040

Permit Set

Job # 24-028 TE# 24307

Description	Date
Permit Intake	10/07/24
1 Correction 01	02/04/25
2 Correction 02	03/06/25

Tryg·stad ENGINEERING
nels@trygstadeng.com
(208)262-6884

Permit No.: 2407-213

Drawn:
Stamp/Approval:

Sheet Name:

SHT. WSWH6 STRONGWALL FRAMING DETAILS

Sheet No:

S7.6

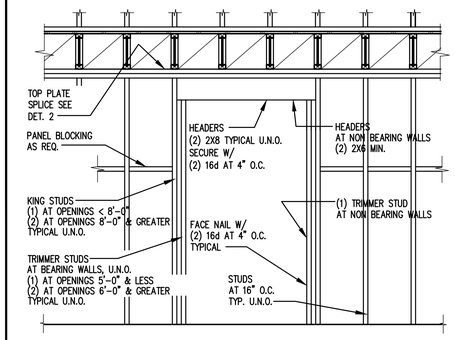

1 TYPICAL HEADER at WALL

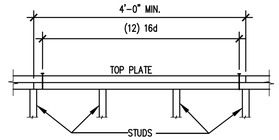

TOP PLATE SPLICE NOTES

1. SPLICE AND NAIL TOP PLATES AS SHOWN AT ALL EXTERIOR, PLUMBING, PARTY AND SHEARWALLS AT EACH FLOOR LEVEL AND AT ROOF.
2. PROVIDE (2) LSTA 36 STRAP W/(26) 10d NAIL ONE EACH SIDE WHERE DRILLED HOLES EXCEED THE FOLLOWING: 1" FOR 2X4 3" FOR 2X6 WALL PLATES. CENTER ALL HOLES MINIMUM EDGE DISTANCE = 1 1/4"

2 TYPICAL TOP PLATE SPLICE

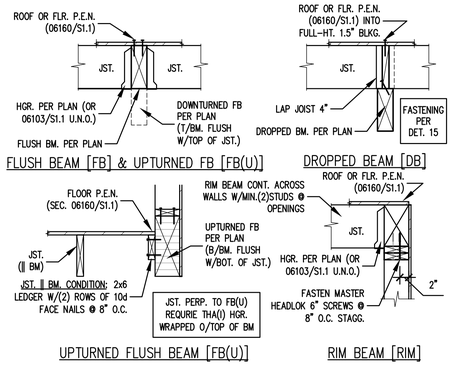

3 TYPICAL WOOD BEAM CONNECTIONS

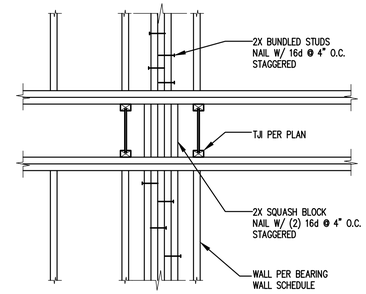

4 TYPICAL BLOCKING at BUNDLED STUDS

FASTENING SCHEDULE (IBC TABLE 2304.10.1)

CONNECTION	FASTENING (a, m)	LOCATION
1. JOIST TO SILL OR GIRDER	(3) 8d COMMON (3) 3" X 0.131" NAILS	TOENAIL TOENAIL
2. BRIDGING TO JOIST	(3) 8d COMMON (3) 3" X 0.131" NAILS	TOENAIL EA. END TOENAIL EA. END
3. 1X6 OR LESS SUBFLOOR TO JST.	(2) 8d COMMON	FACE NAIL
4. 1X8 OR LESS SUBFLOOR TO JST.	(3) 8d COMMON	FACE NAIL
5. 2" SUBFLOOR TO JST./GIRDER	(2) 16d COMMON	BLIND & FACE NAIL
6. SOLE PLATE TO JST. OR BLKG.	16d AT 16" O.C. 3" X 0.131" NAILS AT 8" O.C.	TYP. FACE NAIL TYP. FACE NAIL
SOLE PLATE TO JOIST OR BLOCKING AT BRACED WALL PANEL	(3) 16d COMMON AT 16" O.C. (4) 3" X 0.131" NAILS AT 16" O.C.	BRACED WALL PANELS BRACED WALL PANELS
7. TOP PLATE TO STUD	(2) 16d COMMON (3) 3" X 0.131" NAILS	END NAIL END NAIL
8. STUD TO SOLE PLATE	(4) 8d COMMON (4) 3" X 0.131" NAILS	TOENAIL TOENAIL
	(2) 16d COMMON (3) 3" X 0.131" NAILS	END NAIL END NAIL
9. DOUBLE STUDS	16d COMMON AT 24" O.C. 3" X 0.131" NAILS AT 8" O.C.	FACE NAIL FACE NAIL
10. DOUBLE TOP PLATES	16d COMMON AT 16" O.C. 3" X 0.131" NAIL AT 12" O.C.	TYP. FACE NAIL TYP. FACE NAIL
DOUBLE TOP PLATE SPLICE	(8) 16d COMMON (12) 3" X 0.131" NAILS	LAP SPLICE LAP SPLICE
11. BLOCKING BETWEEN JOISTS OR RAFTERS TO TOP PLATE	(3) 8d COMMON (3) 3" X 0.131" NAILS	TOENAIL TOENAIL
12. RIM JOIST TO TOP PLATE	8d COMMON AT 6" O.C. 3" X 0.131" NAILS AT 6" O.C.	TOENAIL TOENAIL
13. TOP PLATES, CORNER LAPS AND INTERSECTIONS	(2) 16d COMMON (3) 3" X 0.131" NAILS	FACE NAIL FACE NAIL
14. CONTINUOUS HEADER, TWO PIECES	16d COMMON AT 16" O.C.	ALONG EDGE
15. CEILING JOISTS TO PLATE	(3) 8d COMMON (5) 3" X 0.131" NAILS	TOENAIL TOENAIL
16. CONTINUOUS HEADER TO STUD	(4) 8d COMMON	TOENAIL
17. CEILING JOISTS, LAPS OVER PARTITIONS (SECTION 2308.10.4.1)	(3) 16d COMMON MIN.,TABLE 2308.10.4.1 (4) 3" X 0.131" NAILS	FACE NAIL FACE NAIL
18. CEILING JOISTS TO PARALLEL RAFTERS (SECTION 2308.10.4.1)	(3) 16d COMMON MIN.,TABLE 2308.10.4.1 (4) 3" X 0.131" NAILS	FACE NAIL FACE NAIL
19. RAFTER TO PLATE (SECTION 2308.10.1) (TABLE 2308.10.1)	(3) 8d COMMON (3) 3" X 0.131" NAILS	TOENAIL TOENAIL
20. 1" DIAGONAL BRACE TO EACH STUD AND PLATE	(2) 8d COMMON (2) 3" X 0.131" NAILS	FACE NAIL FACE NAIL
21. 1"X8" SHEATHING TO EACH BEARING	(2) 8d COMMON	FACE NAIL
22. WIDER THAN 1"X8" SHEATHING TO EACH BEARING	(3) 8d COMMON	FACE NAIL
23. BUILT UP CORNER STUDS	16d COMMON 3" X 0.131" NAILS	24" O.C. 16" O.C.
24. BUILT UP GIRDER AND BEAMS	16d COMMON AT 32" O.C. 3" X 0.131" NAILS AT 24" O.C.	FACE NAIL TOP AND BOTTOM STAGGERED ON OPPOSITE SIDES
	(2) 20d COMMON (3) 3" X 0.131" NAILS	FACE NAIL AT ENDS AND
25. 2" PLANKS	16d COMMON	AT EACH BEARING
26. COLLAR TIE TO RAFTER	(3) 10d COMMON (4) 3" X 0.131" NAILS	FACE NAIL FACE NAIL
27. JACK RAFTER TO HIP	(3) 10d COMMON (4) 3" X 0.131" NAILS	TOENAIL TOENAIL
	(2) 16d COMMON (3) 3" X 0.131" NAILS	FACE NAIL FACE NAIL
28. ROOF RAFTER TO 2-BY RIDGE BEAM	(2) 16d COMMON (3) 3" X 0.131" NAILS	TOENAIL TOENAIL
	(2) 16d COMMON (3) 3" X 0.131" NAILS	FACE NAIL FACE NAIL
29. JOIST TO BAND JOIST	(3) 16d COMMON (5) 3" X 0.131" NAILS	FACE NAIL FACE NAIL
30. LEDGER STRIP	(3) 16d COMMON (4) 3" X 0.131" NAILS	FACE NAIL FACE NAIL
31. WOOD STRUCTURAL PANELS TO FRAMING	SEE SHEARWALL SCHEDULE	SHEET S1.10
SUBFLOOR TO FRAMING	SEE STRUCTURAL NOTES	SECTION 06160

15 FASTENING SCHEDULE

MIN. NAILING: REFER TO S1.2 FOR STRICTER REQUIREMENTS WHERE SHEARWALLS ARE SPECIFIED ON PLANS

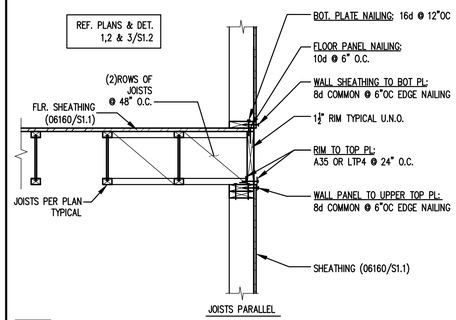

6 TYPICAL JOISTS PARALLEL TO WALL

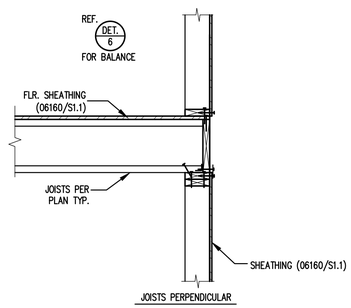

7 TYPICAL JOISTS PERPENDICULAR TO WALL

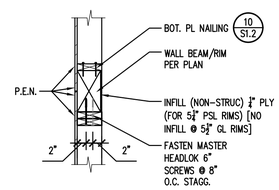

8 RIM BEAM @ STAIRS WELL

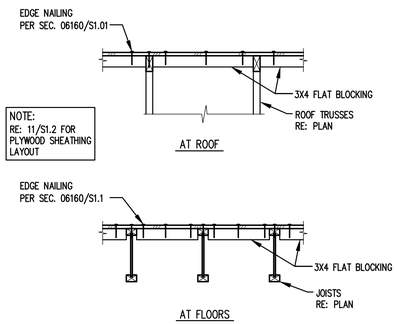

9 TYPICAL DIAPHRAGM FLAT BLOCKING

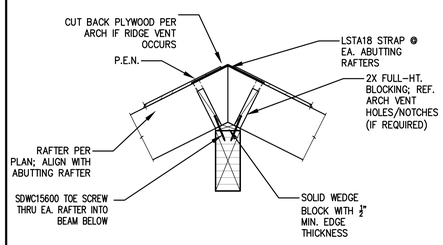

11 RAFTERS TO DROPPED RIDGE BEAM

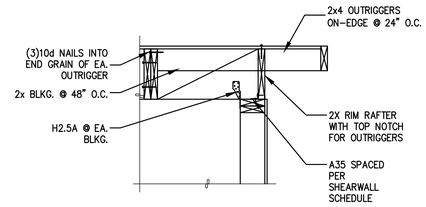

12 TYP. OUTRIGGER TO WALL

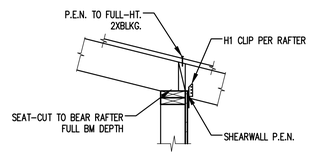

13 ROOF RAFTERS TO WALL

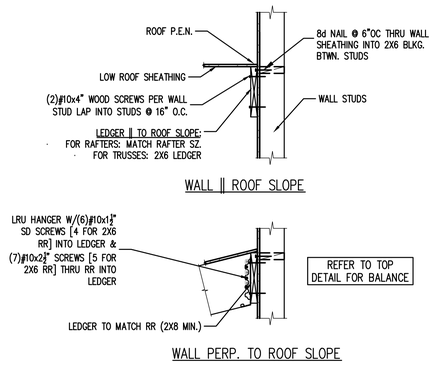

14 LOW ROOF TO WALL ‖ ROOF SLOPE

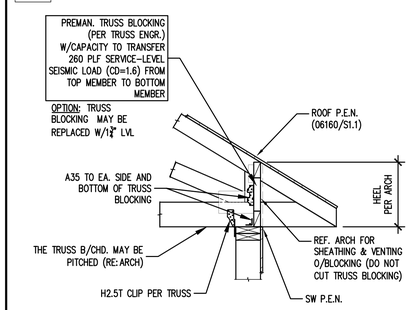

16 TRUSS TO WALL

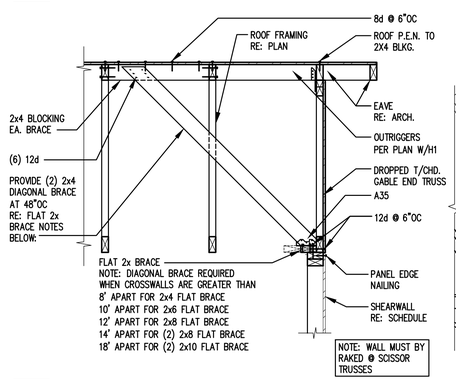

17 TYPICAL TRUSS BRACING AT END WALLS

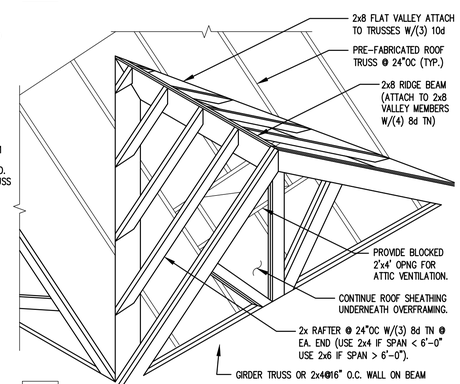

18 OVERFRAMING

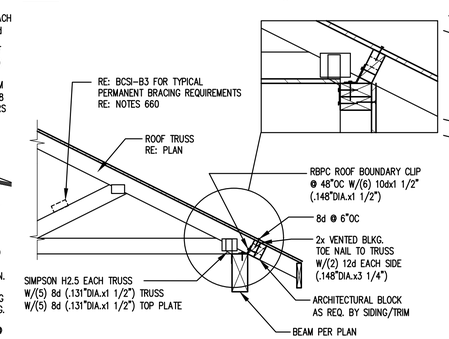

19 TYPICAL TRUSS ON PORCH BEAM

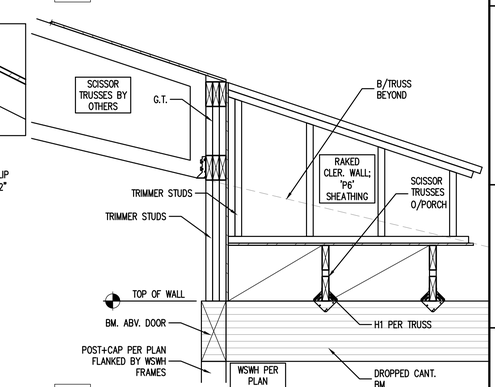

20 RE-ENTRANT DECK CORNER @ ROOF

CONSTRUCTION AND REMODELING

TAM CEM - RESIDENCE

Addition & Alteration
4215 Holly Ln, Mercer Island, WA 98040

Permit Set

Job # 24-028 TE# 24307

Description	Date
Permit Intake	10/07/24
Correction 01	02/04/25
Correction 02	03/06/25

Tryg·stad ENGINEERING
nels@trygstadeng.com
(208)262-6884

Permit No.: 2407-213

Drawn:
Stamp/Approval:

Sheet Name:

FRAMING DETAILS

Sheet No:

S9.1

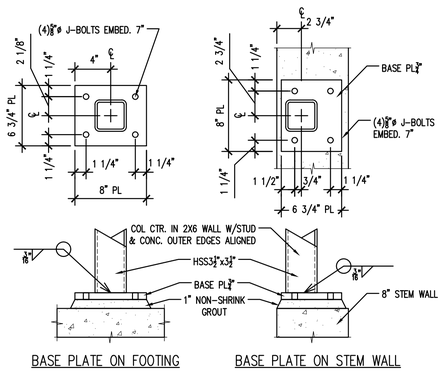

BASE PLATE ON FOOTING

BASE PLATE ON STEM WALL

6 SQ. HSS3-1/2" COLUMN BASE PLATE

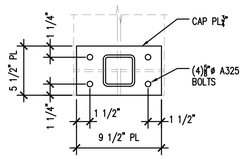

CAP PLATE TOP VIEW

11

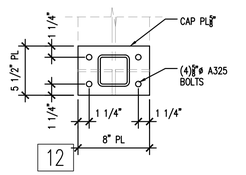

CAP PLATE TOP VIEW

12

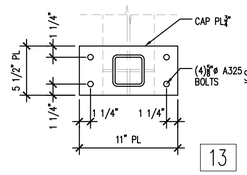

CAP PLATE TOP VIEW

13

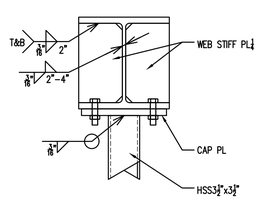

10" & WIDER BEAM SECTION

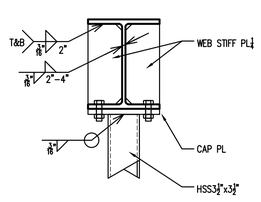

8" TO 9" WIDE BEAM SECTION

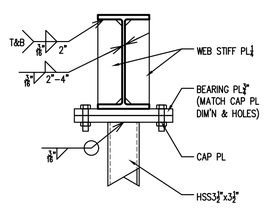

4" TO 6 1/2" WIDE BEAM SECTION

REF. DET. 18 FOR COL IN FRAMED WALL

16 STL. BM. TO SQ. HSS3-1/2" COLUMN

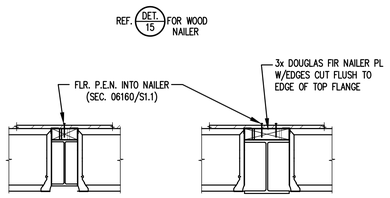

SECTION OF FLUSH W10

SECTION OF FLUSH W12

W10 STL. BM TO STL. BEAM

17

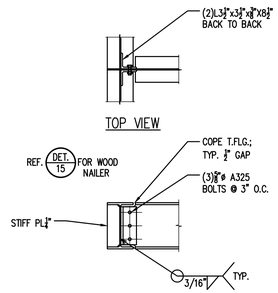

W10 STL. BM TO STL. BEAM

14

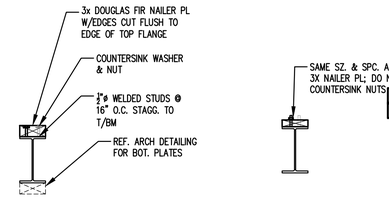

3X NAILER PL SECTION TYPICAL U.N.O.

2X NAILER PL SECTION (WHERE SPECIFIED)

WOOD NAILER PLATE ON STEEL BEAM

15

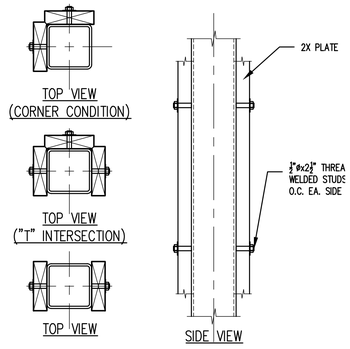

TYP. 2X NAILER TO HSS COLUMN

18

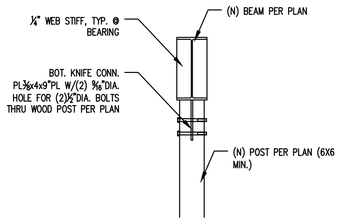

STEEL BEAM TO 6X6 POST

19

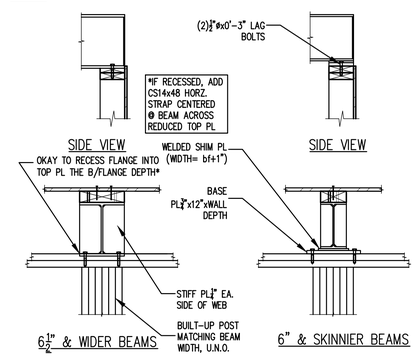

STEEL BEAM ON WOOD WALL

20

CONSTRUCTION AND REMODELING

TAM CEM - RESIDENCE

Addition & Alteration

4215 Holly Ln, Mercer Island, WA 98040

Permit Set

Job # 24-028 TE# 24307

Description	Date
Permit Intake	10/07/24
1 Correction 01	02/04/25
2 Correction 02	03/06/25

Tryg·stad ENGINEERING
nels@trygstadeng.com
(208)262-6884

Permit No.: 2407-213

Drawn:

Stamp/Approval:

Sheet Name:

STEEL FRAMING DETAILS

Sheet No:

S9.2